60

INDUSTRIALIZATION IN LATIN AMERICA: FROM THE "BLACK BOX" TO THE "EMPTY BOX"

Fernando Fajnzylber

CUADERNOS DE LA CEPAL

UNITED NATIONS

C.1

CUADERNOS DE LA CEPAL

INDUSTRIALIZATION IN LATIN AMERICA: FROM THE "BLACK BOX" TO THE "EMPTY BOX"

A comparison of contemporary industrialization patterns

Fernando Fajnzylber

UNITED NATIONS
ECONOMIC COMMISSION FOR LATIN AMERICA AND THE CARIBBEAN
Santiago, Chile, 1990

LC/G.1534-P
August 1990

The author is grateful to the Duke University Center for International Studies, sponsor of the McWane Lectures, which prepared and presented a preliminary version of this study. He is also grateful to Oscar Altimir, Antonio Barros de Castro, Colin Bradford, José Casar, Enzo Faletto, Ricardo Ffrench-Davis, Gary Gereffi, David Ibarra, Eduardo Jacobs, Francois Le Guay, Philippe Lorino, José Mindlin, Herman Muegge, Aníbal Pinto, Gert Rosenthal, Jaime Ross, Alejandro Schejtman, Osvaldo Sunkel, María C. Tavares, Morris Teubal, Alain Touraine, Víctor Tokman and Roberto Zahler.

UNITED NATIONS PUBLICATION

Sales No. E.89.II.G.5

ISSN 0252-2195
ISBN 92-1-121157-3

INDEX

INTRODUCTION

In discussions on the development of Latin America, the question is often raised as to whether the region can properly be considered in a category by itself, for purposes of analysis. In view of the diversity of situations and processes the different States have gone through in their development, it might seem that the only typology that would be appropriate would be one which would include the same number of cases as the number of countries concerned. However, since no theory of development has yet explained satisfactorily the overall transformations which take place in economies and societies, even if each country's case were studied separately, many questions would still remain.

Indeed, after two centuries in which many studies have been made of the origins and consequences of the English industrial revolution, the arguments continue on this subject and on the subsequent decline of England's international position. Many different reasons have been given to explain Japan's remarkable, though belated, industrialization, but no consensus has been reached; nor has a satisfactory explanation been given for the case of Argentina, whose per capita income from 1913 until the late 1950s was higher than that of France and almost double that of Italy, but is now one-fifth that of France and a little over one-third that of Italy. Likewise, Brazil is the Latin American country whose industrialization has received the most attention in academic circles, both within the country itself and within and outside the region. Nevertheless, there are four different interpretations of the origins and processes which led to its industrialization on the basis of agriculture and exports: i) the theory of adverse shocks; ii) the theory of industrialization headed by the growth of commodity exports; iii) the interpretation based on the development of capitalism in Brazil, and iv) the theory which stresses the role of the public sector in promoting industry (Suzigan, 1986).

Although theories come and go, governments have to take action, and they are not immune to the intellectual fads which periodically permeate the social sciences. There is a useful expedient for dealing with this which, although not offering a real solution, does make it possible to mitigate some of the more negative effects of the situation, i.e., to recognize the prevailing circumstances, both domestic and international, even though there may not be a logical explanation for them.

So far, experience has shown that one of the salient features of economic development processes in many different regions is that they seem to be a combination of a learning process, using the more advanced societies as models, and of economic and social inventiveness, with the less advanced countries adopting innovations within the context of their own shortcomings and potentialities. This explains the well-known fact that the channels of change vary widely in content, in direction and in regard to the institutions involved (Prebisch, 1951). In the case of the industrialization process, which is a vital axis of economic development because of the contribution it makes to technical progress and increased productivity, the combination of learning and innovation becomes even more important. One of the characteristics of industrialization in Latin America so far has, in fact, been the asymmetry between a high component of imitation (the stage prior to learning) and a very small component of economic and social innovation.

In a previous study (Fajnzylber, 1985), the author has stated that the Latin American countries need to modify the industrialization pattern which has been the basis for the structure of production in recent decades. In this study, we shall discuss in depth both the pattern which must be changed, and the direction, requirements and policy guidelines that must be followed in order to achieve this.

In the first chapter, we describe the Latin American industrialization process in terms of its contribution to the achievement of the objectives of economic growth and equity, identifying those features which are common to the different countries and those which are unique to individual countries and thus account for the diversity of the region. We also describe briefly the characteristics of the so-called industrial crisis of the 1980s.

In the second chapter, we discuss what seems to be one of the main characteristics of the patterns followed in the industrialization and development of Latin America, i.e., its inability to absorb and creatively adopt technical progress in a manner consistent with the region's shortcomings and potentialities. We also describe the relationship between technical progress and the industrial sector, and the contribution of macroeconomics. Finally, we summarize the technological changes that have taken place on the international scene, and discuss their implications for Latin America.

On the basis of the observations set forth in the first two chapters, we propose, in the third chapter, an analytical scheme for studying this relationship —which serves as the leitmotif for this study— between the pattern of industrialization and development and the achievement of the objectives of economic growth and equity.

In chapter four, the analytical scheme is discussed against the background of the actual situation of the three advanced industrial

countries (the United States, Japan and the Federal Republic of Germany) which to a large extent establish the pattern of consumption, production, communications, transport and energy which prevails on the international scene.

In chapter five, attention is centered on Europe, which is divided into two subregions: the large Western countries, with which the American countries, especially the southern Latin American ones, have always had close relations; and the small North European countries, relations with which have been based on the availability of natural resources, specialized industries geared towards the international market and a sound system of participative democracy.

In chapter six, our attention is drawn back to Latin America, this time with a view to comparing this region with certain recently industrialized countries whose industrial performance seems to be more satisfactory. Thus, we compare the situation of the three largest Latin American countries —Argentina, Brazil and Mexico— with that of South Korea, Spain and Yugoslavia. Finally, some comments are made regarding the lessons which can be learned from this comparative study, with a view to drawing up more accurate guidelines for the internal changes the Latin American countries must make in order to face the challenge that lies ahead, i.e., to come closer to the hitherto empty box in which economic growth converges with equity.

I. THE EMPTY BOX

1. Industrialization, growth and equity in Latin America

We shall define dynamism as the rate of growth attained by the advanced countries over the past 20 years (GDP per capita annual rate, 2.4%), and equity as the ratio between the income of 40% of the lowest-income population and of 10% of the highest-income population. In the advanced countries, this ratio averaged 0.8 in the late 1970s and early 1980s, i.e., 40% of the lowest-income population has an income equivalent to 80% of the income of 10% of the highest-income population. Let us assume that in Latin America, the dividing line between the countries that have attained the highest and the lowest levels of equity is defined by this same ratio, but at a value of 0.4, i.e., half that of the industrialized countries (World Bank, 1986a). When the growth and the equity variables are crossed, with the dividing line of dynamism being the average growth of the advanced countries during the period 1965-1984, and the dividing line for equity being the ratio between the poorest 40% and the richest 10% (table 1), a dual-entry matrix is generated in which one box remains empty, representing those countries which could have simultaneously attained a higher rate of growth than that of the advanced countries and a level of equity of more than 0.4. This empty box brings to light the key question we shall try to address in this study.

Approximately 73% of the region's gross domestic product is generated in countries which might be called dynamic disarticulated countries (Brazil, Colombia, Dominican Republic, Ecuador, Mexico, Panama, and Paraguay); 11% is accounted for by countries at the other end of the scale, i.e., countries that are integrated or articulated but stagnant (Argentina and Uruguay), and the remaining 16% is accounted for by countries which are both disarticulated and stagnant. The latter category includes some potentially explosive cases, inasmuch as stagnation and social disarticulation lead to an unjust income distribution, giving rise to a wide range of proposals aimed at stirring society to do something to remedy the situation.

So far, the box representing growth with equity is empty, at least in the case of the countries for which comparable information is available. As is to be expected, the place assigned to each country on the chart depends on the point at which the waters divide. Thus, for example, if the equity borderline moved slightly downward, the upper right-hand box would include countries such as Costa Rica, Chile and Venezuela; if the growth borderline moved slightly upward, the number of dynamic countries would decrease, with Brazil, Mexico, Ecuador and Colombia keeping their place in that box.

One might assume that the empty box could only be filled by countries that had advanced in their development process. This assumption is proved false, however, by the case of countries in other regions that have attained levels of income and development comparable to those of Latin America. There are at least six countries in different regions and, in fact, with different socioeconomic and political systems (table 2) which, according to the same sources of information (World Bank), could be placed in the box which remains empty for Latin America, i.e., South Korea, Spain, Yugoslavia, Hungary, Israel and Portugal. These are coun-

Table 1

LATIN AMERICA: STRATEGIC OBJECTIVES: GROWTH-EQUITY

	Equity $\frac{\text{40\% lowest-income}}{\text{10\% highest-income}}$ (1970-1984)		
	<0.4[a]		≥0.4
<2.4%[b]	Bolivia Chile Peru Venezuela Haiti (15.9)[c]	Costa Rica El Salvador Guatemala Honduras Nicaragua	Argentina Uruguay (11.5)[c]
≥2.4%	Brazil Colombia Ecuador Mexico Paraguay (72.6)[c]	Panama Dominican Republic	

Growth GDP per capita (1965-1984)

Source: Joint ECLAC/UNIDO Industry and Technology Division, based on World Bank Data.
[a]Industrialized countries half comparable ratio. [b]Industrialized countries GDP per capita average annual growth rate (1965-1984). [c]Share of regional GDP.

Table 2

OTHER COUNTRIES: STRATEGIC OBJECTIVES: GROWTH-EQUITY

	Equity $\frac{\text{40\% lowest-income}}{\text{10\% highest-income}}$ (1970-1984)	
	<0.4[a]	≥0.4
<2.4%[b]		
Growth GDP per capita (1965-1984) ≥2.4%		South Korea Spain Yugoslavia Hungary Israel Portugal

Source: Joint ECLAC/UNIDO Industry and Technology Division, based on World Bank Data.
[a]Industrialized countries half comparable ratio. [b]Industrialized countries GDP per capita average annual growth rate (1965-1984).

tries whose size and economies are comparable to certain Latin American countries. Because of certain characteristics pertaining to the origin of their societies and their geopolitical role, they meet the requirements of economic growth and equity. The question arises, therefore, whether it is the specific nature of Latin America's development which gives rise to the empty box.

In this study, we shall try to understand the Latin American situation in the light of a comparative study of certain countries inside and outside the region. Historians realize that if we are to understand a region such as Latin America, we must be familiar with the rest of the world; this fact has not always been taken into account, however, in studies on the development of the region.

To begin with, it may be worthwhile to compare the relative situation of Latin America in different branches of activity as they relate to the international economy. Thus, a fact comes to light which may provide a clue with which to begin our study: the region contributes more in terms of population than of any other indicator of economic activity. In

addition, there are clear indications that the share of the region decreases as the intellectual value added increases. In terms of population, the region accounts for 8%; as regards the gross domestic product, for 7%, and as regards the manufacturing product, for 6%. With regard to manufacturing, if attention is centered on capital goods, the region's share drops sharply to 3%; engineers and scientists account for 2.4%, and the resources available to these engineers and scientists to carry out their activities represent barely 1.8%. Finally, as regards authors of scientific works, this indicator, although not very reliable, shows a Latin American participation of slightly over 1%.

A fundamental feature of Latin American development would thus be a very scanty intellectual value added to human and natural resources; in one way or another, this implies that development has been brought about more by imitation than by a process of reflection on internal shortcomings and potentialities. The inadequacy, in several respects, of the development process with respect to specific shortcomings and potentialities of the different countries of the region will be a recurring theme in our subsequent discussion and in the comparisons we make at the international level. Thus, it would seem that the central feature of the process of development in Latin America has been its inadequate adoption of technical progress, and its scanty contribution to original thinking based on the true situation in order to define the range of decisions involved in economic and social change. The empty box would appear to be directly related to what might be called an inability to open the "black box" of technical progress; this is partly due to the origin of Latin American societies, their institutional structure, their cultural context and a set of economic and structural factors which have a complex but indisputable bearing on the social and political environment. Although this view of the situation only provides a preliminary working hypothesis, it is useful as the thread with which to weave our subsequent arguments.

Acknowledgment of this shortcoming associated with the empty box is perfectly compatible with recognition of the profound changes that took place in the Latin American economies and societies between 1950 and 1981, those years which Hirschman (1986) calls the glorious 30 years of Latin American history. Indeed, during that time, the product increased fivefold, while the population rose from 155 million to almost 400 million; the process of urbanization took place at such a rapid pace that in several of the countries of the region in which more than half the population was devoted to agriculture in 1950, no more than one-fourth or one-third are currently in this activity; education and health levels improved, with life expectancy rising considerably in every country of the region, and institutions were created which favoured the economic, social, political and cultural integration of the region. In addition, the

groundwork was laid for technological development in some very important branches having to do with agriculture, public works and energy.

The world has grown and has undergone economic, social, political and cultural changes since World War II, at a rate never before seen in history, and many of these changes have also taken place in Latin America. These positive changes in the region should not, however, lead us into complacency.

2. Common features of Latin American industrialization

Four features characterize the pattern of industrialization followed in Latin America: a) participation in the international market based almost exclusively on a trade surplus generated through natural resources, agriculture, energy and mining, and a systematic trade deficit in the manufacturing sector (except in the case of Brazil, from 1982 on); b) an industrial structure conceived for and directed fundamentally at the domestic market; c) a desire to reproduce the lifestyle of the advanced countries, both as regards consumption and, in varying degrees, as regards domestic production; and d) underestimation of the social role of entrepreneurs and weak leadership on the part of public and private national corporations in those sectors whose dynamism and content define the industrial profile of each country.

a) *International insertion on the basis of raw materials*

After more than 40 years of industrialization, and having soon become aware of the deteriorating trend in the terms of trade for natural resources —which, as in the United States, are abundant in the region— with respect to manufactures, all the countries of the region, without exception up to 1982, had a positive trade balance only in respect of agriculture, energy or mining, depending on the country concerned, and had a deficit in respect of manufacturing (table 3). Beginning in 1982, Brazil had a surplus in the manufacturing sector, but the other countries still showed deficits. As regards Brazil, there are several views as to the possible structural nature of the surplus of the manufacturing sector. Some hold that it is a passing situation that has to do with the contraction of the domestic market (1980-1983), with the dynamism of imports from the United States in 1984 and with the relative decline in the rate of domestic investment during the first half of the 1980s; others feel that the great investment effort made by Brazil during the 1970s in the industrial sector laid the foundation for generating a sound and growing manufacturing surplus (Barros de Castro, 1985). The deterioration of the

trade balance in the manufacturing sector in 1986, associated with a strong increase in domestic demand, has revived this controversy, which has important implications for the rest of the region.

As regards the terms of trade, it is evident that the misgivings of the 1940s were fully justified: between 1950 and 1985, the index of relative prices as between agriculture and manufacturing fell from 168 to 81 (1979-1981=100); in mining, from 124 to 79; and for oil, from 26 in 1950, it fell to 13 in 1970, rose to 107 in 1980, and dropped again to 101 in 1985 (World Bank, 1986b).

The region denounced these trends, but the changes made in the structure of production were not sufficient to neutralize their adverse effects. In the mid-1970s, some countries of the region, noting the

Table 3

LATIN AMERICA: TRADE BALANCE BY SECTORS OF ECONOMIC ACTIVITY, 1985

(Millions of dollars)

	Total sectors	Agriculture	Manufacturing industry[a]	Energy	Mining	Other sectors
Total Latin America	34 541	19 372	-13 649	22 593	6 282	-57
Oil-exporting countries	20 241	-285	-11 606	29 566	2 593	-27
Bolivia	-17	-107	-538	371	257	-
Ecuador	1 258	743	-1 346	1 897	-35	-1
Mexico	9 197	-209	-5 092	14 049	455	-6
Peru	1 084	224	-948	637	1 171	-
Venezuela	8 719	-936	-3 682	12 612	745	-20
Non-oil-exporting countries	14 300	19 657	-2 043	-6 973	3 689	-30
Argentina	4 581	5 576	-1 113	151	-34	1
Brazil	11 265	8 567	5 791	-4 901	1 822	-14
Colombia	-559	1 748	-2 271	94	-114	-16
Costa Rica	-159	595	-570	-165	-19	-
Chile	904	887	-1 523	-512	2 052	-
El Salvador	-493	234	-470	-253	-4	-
Guatemala	-305	641	-487	-447	-12	-
Honduras	-171	549	-520	-220	21	-1
Nicaragua	-799	143	-596	-339	-7	-
Paraguay	-197	237	-286	-142	-6	-
Uruguay	233	480	2	-239	-10	-

Source: Joint ECLAC/UNIDO Industry and Technology Division, updated on the basis of Data Bank on Latin American and Caribbean Foreign Trade (BADECEL).

[a] Manufacturing industry includes SITC sections 5-8, except division 68 (non-ferrous metals).

unsatisfactory results of this industrialization pattern, adopted policies which led to an increase in the manufacturing sector's deficit without having much impact on the surplus in the natural resources sectors. Their international financial liquidity temporarily mitigated the impact of this problem, but it came up again, in even more serious proportions, in 1982, when the net flow of financial resources showed a negative balance, and the terms of trade fell even more sharply (ECLAC, 1986 a) and b)).

The problem is further aggravated by the fact that the manufacturing deficit is concentrated precisely in the sectors having a greater content of technology and greater growth, i.e., capital goods, chemicals and the automobile industry. The region's position is poor precisely in those areas which offer a promising future for international trade, and strong in those which are not so promising.

b) ***Industrialization directed at the domestic market***

Whatever may be the specific situation in individual countries —a matter we shall discuss later on—, in every case, industrial exports represent a low percentage of industrial production and, judging by the technology applied in production, processing and manufacturing, it would appear that such activities have been conceived fundamentally for purposes of supplying the domestic market. This does not mean that there were no exceptions in certain periods, sectors and countries, or that no export promotion policies were applied during the mid-1960s. The crucial fact is that the domestic market has always been more profitable than the international market (table 4).

Since the late 1970s, investment in exports has had to compete not only with easily reached and protected domestic market, but also with an even more attractive option, i.e., that of placing money on the international financial market at high dollar interest rates. To give an idea of the magnitude of this new phenomenon —which works against productive investment in exports and in the domestic market and which is related, among other factors, to the United States deficit— suffice it to say that on the Eurodollar market alone, the volume of trading each year is equivalent to 25 times the volume of international trade in goods and services. Even allowing for some duplication in the recording of these transactions, the orders of magnitude involved show that this is a new phenomenon which is potentially very significant.

Even in the case of Brazil, whose industrial exports represent half the manufacturing exports of the region and more than 50% of its own total exports, the coefficient of industrial exports is low, and the domestic market remains the priority target of most enterprises and sectors. In 1980, the export coefficient in respect of industrial output was 5.3%, using a strict definition of manufactures, and 8.0%, using a broader

definition. This applies, with no major variations, to national and foreign private firms and State firms. While this is serious in a country whose GNP is equivalent to that of Sweden, Norway, Denmark and Finland all together (all oriented towards the international market), it is even more serious in the small and medium-sized countries of the region (with export coefficients in the order of 10%). Thus, there is a repetition of the pattern seen in the United States, where production is concentrated on the domestic market, with the difference that the country with the largest domestic market of the region (Brazil) currently represents 1/13 that of the United States. At the end of World War II, it represented 1/25 that of the United States, when the latter was generating 40% of the world product and 60% of world exports, with a population equivalent to 6% of the world total.

Table 4

LATIN AMERICA: MANUFACTURING[a] EXPORT COEFICCIENT

(Percentages)

	1965	1970	1975	1980	1981	1982	1983	1984	1985
Argentina	2.0	7.0	2.9	3.9	4.5	5.6	4.5	3.8	5.5
Brazil	2.1	2.8	3.0	5.3	6.1	5.0	7.4	17.3	28.4
Mexico	...	2.5	2.2	2.8	2.5	3.7	6.3	6.0	7.1
Bolivia	4.8	2.6	3.5	3.2	2.1	1.6	...	...	...
Colombia	1.4	2.0	4.9	4.9	5.0	4.5	3.5	3.6	4.6
Chile	1.3	2.2	5.4	6.1	4.4	5.1	5.4	6.0	6.6
Ecuador	1.8	1.9	5.4	9.8	7.4	6.6	2.4	4.4	...
Paraguay	12.5	9.0	10.6[b]	...	...	...	...	...	...
Peru	0.6	0.5	0.5	5.1	3.3	3.5	2.5	3.1	...
Uruguay	3.9[c]	2.3[d]	4.8	7.8	6.6	7.6	11.3	11.7	10.3
Venezuela	1.2	0.6	0.8	1.0	1.3	1.0	0.7	1.9	5.0
Costa Rica	3.8	9.7	11.5	12.3	18.3	13.5	11.8	...	...
El Salvador	5.0	15.7	17.6	24.3	17.0	15.9	13.2	...	...
Guatemala	26.8[c]	18.3[d]	15.8	21.2	17.1	16.4	16.5	14.4	...
Honduras	5.5	10.4[d]	15.3	13.3	11.6	10.3	9.4	7.6	...
Nicaragua	2.6	9.2	8.9	7.6	5.0	2.7	2.7	1.6	...
Dominican Republic	1.8	1.8	7.1	6.7	6.6	3.9	4.9	4.0	...

Source: Joint ECLAC/UNIDO Industry and Technology Division, on the basis of UNIDO data; United Nations, *Industrial Statistics Yearbook 1983*; and ECLAC, *América Latina y el Caribe: exportaciones de manufacturas por países y según su origen industrial desde 1961 hasta 1982* (LC/L.351), Santiago, Chile, 1985.

[a]Definition of manufactures and semimanufactures based on UNCTAD document TD/B/C.2/3. [b]1974. [c]1968. [d]1971.

The region's particular problem, however, does not lie in the application of an import-substitution policy —this was done throughout the world, except in England, in the late eighteenth and early nineteenth centuries—, but rather in the economic model it applied. Import-substitution has been an integral part of an industrialization pattern that is characterized by a set of elements that work together and strengthen each other; it may be easier to isolate one of these components and centre all attention on it, but this does not work when it comes to designing different industrialization strategies. It should be stressed, however, that a region in which the hourly cost of the manufacturing sector ranges between 1/7 and 1/20 of that prevailing in the developed countries, with a lower tax burden, with productivity levels that are less than 50% of those of the developed countries and with similar access to technologies, can hardly afford to passively maintain a high and indiscriminate level of protectionism. International experience has shown that radical and candid opening up of the economy is not wise either, but that the countries should, for the time being, establish, at a sectoral level, a strategy allowing for domestic industries to learn technologies that will enable them to attain a secure place on the international market.

c) ***The consumption pattern***

The desire to reproduce the lifestyle of the advanced countries, especially that of the United States, is a common feature of all the countries in the region; this desire seems to be shared by an overwhelming majority of the world's population, regardless of level of development, socioeconomic system or ethnic background. What is specific to the region is the way in which it is becoming an integral part of industrial demand and supply, the energy platform, marketing, communications and consumer finance. The degree to which different objects are disseminated from the top to the base of the income pyramid depends on unit prices. When cheap goods (beverages, wearing apparel and some household appliances) are concerned, dissemination even reaches the rural sectors. When consumer electronics are included, it reaches the popular urban sectors and, in the case of the automobile (the good which in a way symbolizes this consumption pattern), it reaches the middle-income sectors. The reference lifestyle has arisen in a country whose per capita income is currently equivalent to more than seven times the per capita income of Latin America, and whose economy is practically five times larger than that of the Latin American countries taken together. Moreover, the very country in which it originated has recently noted that this lifestyle is so expensive that its own domestic resources are not sufficient to sustain it, so that the United States has recently fallen into the category of a net debtor, with the sole difference that it issues the currency in which its debt is figured. In order to recover its international

competitiveness and avoid falling back in terms of growth and productivity, it has had to resort to devaluation so as to erode the relative level of domestic wages.

In Latin America, physical objects have been transplanted to a greater extent than the know-how and the institutions required to design, produce and adapt these objects to local conditions. The desire to have them has been greater than the desire to assimilate the modern know-how and the interpersonal relations that went into their design.

Assuming that the United States lifestyle is part of a collective ideal, the challenge consists in making this fact compatible with the search for social and economic articulation at the domestic level, and securing a sound position in the international economy. In Latin America, the desire to reproduce the United States lifestyle, in that part of the income pyramid that is able to pay the prices of the various goods, has prevailed over the objectives of articulation at the national level and of securing a good position at the international level. This may be seen, for example, in the density of consumption of certain expensive objects (automobiles), which is much greater than in other recently industrialized countries with a comparable level of income. Moreover, contrary to the case in other countries and regions, local production of these objects for the domestic market has been set up in a large number of small-scale factories, which are structurally incompatible, in most cases, with the requirements of the international market. Access to these goods has been facilitated through "carbon-copies" of the consumer credit mechanisms applied in the countries of origin, with the inevitable implications this has for family savings and the availability or resources for investment.

In an advanced country such as Japan, which was also a latecomer on the industrial scene, and whose per capita income represents almost 80% that of the United States, the density of automobiles is equivalent to 40% that of the United States, and consumer credit availability is equivalent to 1/7 of the GNP. It is interesting to note that Japan is the primary foreign supplier of automobiles for the United States. Several of the Scandinavian countries having per capita incomes comparable to those of the United States and whose markets, in terms of GNP, are larger than those of the medium-sized countries of the region, have a high density of automobile consumption, but have not yet started to produce them domestically. South Korea, with a per capita income similar to that of the larger countries of the region, a product equivalent to 1/3 that of Brazil and 1/2 that of Mexico, and which currently exports automobiles to Canada and the United States through national firms, has an automobile density equivalent to between 1/5 and 1/10 that prevailing in the Latin American countries.

As regards foodstuffs, it is clear that commodities have been neglected on the domestic markets of Brazil and Mexico. Over the past 10

years, there has been a significant increase in agricultural production for export and in the production of sugar cane as a substitute for oil in Brazil, along with a drop in per capita cereal production; the cereal import coefficient has been rising regularly in both countries, reaching a level of approximately 20% in the early 1980s. In Argentina, these products are some of the main export items.

In Argentina and Korea, the problem of supplying basic foods for domestic consumption has been solved, inasmuch as Argentina has an abundance of natural resources and Korea has placed a high value on attaining self-sufficiency in food production. (Per capita calorie consumption in Argentina is similar to that of the United States and higher than that of Europe and Japan.)

As regards dietary content, as shown in table 5, there is a clear contrast between a country which seeks to make up for its own shortcomings and potentialities (Republic of Korea) and the Latin American countries, which try to reproduce, at the top of the income pyramid, the food pattern of the United States, with a large part of the diet consisting of foods of animal origin, especially beef, whereas in Korea consumption of grains and fish is predominant. Although calorie and protein content are comparable, the composition of the diet is quite different. In Latin America, the diet of the middle- and upper-income urban sectors, which is very similar to that of the United States, has been superimposed on that of the rural and lower-income urban sectors, whose diet is much lower in absolute terms as well as in terms of meat and milk content.

Another contrast between the food patterns under consideration has to do with the energy efficiency (this being understood as the biological or commercial energy required per calorie consumed by the average consumer) of the different countries. Suffice it to say that the loss of efficiency involved in the transformation of grains into animal foods and the estimates made for the United States food system —which is the pattern usually imitated— show that around nine calories of fossil energy are required for each calorie available "on the consumer's plate" (Steihart and Steihart, 1985). The Japanese consumption model, and even more so the Korean one, would quite probably require less than half this amount. Only the great disparities among food consumption patterns in Latin America make it possible for the reference pattern to be fully reproduced at the top of the income scale, inasmuch as, according to Schejtman, in the specific case of South America, twice the current gross total consumption of oil (1980) would be required if production and consumption patterns like those of the model usually imitated were to be generally adopted (Schejtman, 1985, p. 53).

Japan and Korea have also tended to gravitate towards the American lifestyle, both as regards vehicles and as regards diet, but this trend,

Table 5

LATIN AMERICA AND REPUBLIC OF KOREA: DAILY INTAKE

	Consumption				Calories				Proteins			
	Latin America		*Korea*		*Latin America*		*Korea*		*Latin America*		*Korea*	
	Kg/year (1979-1981)	Per-cent-age	Kg/ year (1975)	Per-cent-age	Value (1979-1981)	Per-cent-age	Value (1975)	Per-cent-age	Grams (1979-1981)	Per-cent-age	Grams (1975)	Per-cent-age
Vegetable origin	**459.9**	**76.1**	**364.4**	**88.6**	**2 184**	**83.3**	**2 282**	**93.2**	**39.6**	**59.2**	**53**	**75.7**
Rice	39.7	6.6	126.0	29.8	265	10.1	1 243	50.8	5.3	7.9	23	32.9
Wheat	58.1	9.6	40.9	9.7	400	15.3	408	16.6	11.8	17.7	12	17.1
Corn	37.7	6.2	-	-	337	12.8	-	-	8.4	12.6	-	
Other grains	3.7	0.6	48.6	11.5	26	1.0	472	19.3	0.8	1.1	11	15.7
Total food grains	**139.2**	**23.0**	**215.5**	**51.0**	**1 028**	**39.2**	**2 123**	**86.7**	**26.3**	**39.3**	**46**	**65.7**
Fruits	102.7	17.0	15.2	3.6	144	5.5	24	1.0	1.6	2.4	1	1.4
Vegetables	37.6	6.2	105.1	24.9	30	1.2	40	1.6	1.3	1.9	3	4.3
Potatoes	-	-	27.6	8.9	-		86	3.5	-		2	2.9
Total fruits and vegetables	140.3	23.2	147.9	37.4	174	6.7	150	6.1	2.9	4.3	6	8.6
Others of vegetable origin	**171.4**	**38.4**	-	-	**897**	**34.2**	-	-	**4.2**	**6.3**	-	-
Pulses	9.0	1.5	1.0	0.2	85	3.2	9	0.4	6.2	9.3	1	1.4
Animal origin	**144.8**	**23.9**	**48.2**	**11.3**	**437**	**16.7**	**166**	**6.8**	**27.0**	**40.8**	**17**	**24.3**
Beef	16.6	2.7	1.9	0.4	97	3.7	9	0.4	6.3	9.5	1	1.4
Pork	6.1	1.0	4.7	1.1	34	1.3	48	2.0	1.9	2.9	2	2.9
Chicken	7.0	1.2	1.9	0.4	29	1.1	6	0.2	2.1	3.2	1	-1.4
Fish and seafood	13.5	2.2	24.9	5.9	24	0.9	68	2.8	3.4	5.1	11	15.7
Other meats	5.4	0.9	-	-	18	0.7	-	-	2.4	3.7	-	-
Total meats and fish	**48.6**	**8.0**	**33.4**	**7.8**	**202**	**7.7**	**131**	**5.4**	**16.1**	**24.4**	**15**	**21.5**
Milk	87.4	14.5	11.3	2.7	155	5.9	19	0.8	9.2	13.8	1	1.4
Eggs	6.2	1.0	3.5	0.8	23	0.8	16	0.6	1.7	2.6	1	1.4
Animal oils and fats	2.6	0.4	-	-	57	2.2	-	-	-	-	-	-
Total	**604.7**	**100.0**	**412.6**	**99.9**	**2 621**	**100.0**	**2 488**	**100.0**	**66.6**	**100.0**	**70**	**100.0**

Source: Joint ECLAC/FAO Agriculture Division and World Bank.

which is a worldwide one, has been moderated in order to protect growth, international competitiveness and minimum standards of equity, and promote the process of social integration.

d) ***Failure to recognize the social value of national entrepreneurs and weakness of their leadership***

In most cases, national private enterprises have not exercised leadership in the more dynamic industrial sectors (automobiles, chemicals, capital goods) which bring in technical progress and determine the national profile of production; among the largest companies in each country, national private firms rank in a modest third place, after public enterprises and transnational corporations (Fajnzylber, in press); a study of the position of the countries of the region as regards the presence and the importance of small and medium-sized enterprises, which by definition are national private companies, will show that they are much less important than in the advanced and recently industrialized countries of other regions (Italy, Japan, India and Spain).

The strong role played by small and medium-sized industries and the increasing attention being given to them in the advanced countries, in several different sectors, all of which are exposed to international competition, suggests that some objections may be made to the determinism with which the small size of domestic markets is often viewed. This is often used as an excuse both for the absence of investment opportunities and the maintenance of highly protectionist policies. Moreover, since the mid-1970s, empirical observation in the advanced countries has confirmed the fact that these companies are much more dynamic not only as regards employment but also as regards flexibility and technological innovation. Finally, an analysis of the role of the national private sector in technological research and development show that, even in the more advanced countries of the region, their participation is marginal.

To the above facts are added two others which, although difficult to quantify, are nevertheless significant: the role of corporations as such, independently of the ownership system followed, is not appreciated by society in Latin America, but the issue of ownership, which has become deeply associated with ideology, arouses great interest in public debate. Although the similarities with the United States hold, as regards consumption patterns, the domestic orientation of production, and international insertion by way of natural resources, the difference could not be greater as regards this fourth aspect. This is, moreover, one of the features which distinguishes the region from those recently industrialized countries which have succeeded in competing on the international market. The Latin American countries will not be able to get away from this "showcase modernness" until such time as their societies properly

appreciate the role of their enterprises and their entrepreneurs exercise creativity. This is a very complex issue which goes beyond the sphere of trade, fiscal or monetary policy; hence, it cannot be considered merely in the light of doctrinaire positions to be imposed by decree. Economic policy instruments and decrees may have positive or negative effects, but they are not sufficient in and of themselves. A cultural and axiological dimension is involved, and a crucial role is played by political debate based on realities, social agreement, transparency in the transmittal of information, the mass communications media and the educational process.

In this regard, there are several basic differences between the Republic of Korea and the Latin American countries. In Korea, a predominant characteristic, which is even more pronounced than in Japan, is the close linkage between the State and a number of national conglomerates centered especially in the manufacturing sector, but also showing a high degree of diversification. The 10 largest conglomerates (table 6) generate almost one-fourth of the gross national product and the 46 largest conglomerates originate 43% of the GNP. The national private conglomerates of Latin America do not come anywhere near to carrying that much weight, and their organic linkage with the State is much weaker. Moreover, whereas in Korea the public sector has played a decisive role in financial intermediation, public development banks in Latin America, although relatively important, coexist with a private banking system which accounts for the bulk of short-term financial intermediation (*Asian Development Review,* 1984).

The subsidiaries of transnational corporations play a much less important role in Korea than in the Latin American countries, where they exercise leadership and concentrate on the domestic market.

Finally, public enterprises account for a much greater share of investment in Korea than they do in Argentina and Brazil, and a lesser share only by comparison with Mexico, where the petroleum sector (PEMEX) is particularly strong. In brief, whereas in Korea leadership is provided by a strong, planning-oriented State which is organically articulated with a small number of powerful national conglomerates, with a number of TNC subsidiaries playing a minor, complementary role in certain export-oriented sectors, what we see in Latin America is a distribution of functions in which transnational corporations exercise leadership in the more dynamic industrial sectors, public enterprises take care of infrastructure branches, and national private companies are relegated to less dynamic and less technologically complex industrial activities and the production of services, including financial intermediation (table 6).

Table 6

IMPORTANCE OF DIFFERENT ENTREPRENEURIAL AGENTS

	Argentina			Brazil			Mexico			Republic of Korea		
Foreign investment: stock of foreign investment (end of 1970s) (millions of dollars)[a]	5 489 (1983)			13 005			3 868			737		
Share of transnational corporations in manufacturing gross output[a]	31 (1972)			44 (1977)			39 (1970)			11 (1975)		
Share of transnational corporations in exports of manufactures[a]	>30 (1969)			43 (1969)			34 (1974)			27 (1978)		
Public enterprises: share in fixed total investment[b]	20 (1978-1980)			23 (1980)			29 (1978)			25 (1974-1977)		
Contribution of private national conglomerates to GDP (1978):												
10 largest										23.4		
46 largest										43.0		
State corporations (I)												
Private national corporations (II)												
Transnational corporations (III)												
Percentage structure in total sales (1983)[c]	I	II	III	I	II	III	I	II	III			
10 largest corporations	45.1	7.1	47.8	59.3	11.2	29.5	83.7	14.2	2.1	...	...	...
50 largest corporations	37.1	24.5	38.4	47.4	20.8	31.8	65.9	24.5	9.6	...	...	...

Source: Joint ECLAC/UNIDO Industry and Technology Division.

[a]Centre on Transnational Corporations, *Transnational Corporations in World Development. Third study.* New York, 1983. [b]J. Sachs, *External debts and microeconomic performance in Latin America and East Asia,* Brookings Papers on Economic Activity No. 219, 1985; and K.S. Kim, *Industrial Policy and Industrialization in South Korea,* Kellogg Institute Working Paper No. 39, 1985. [c]Joint ECLAC/UNIDO Industry and Technology Division, *Industrialización y desarrollo tecnológico,* Informe No. 1, Santiago, Chile, September 1985; and ECLAC, *Las empresas transnacionales en Argentina,* Estudios e Informes de la CEPAL, No. 56, Santiago, Chile, United Nations publications, Sale No. S.86.II.G.6.

e) *Interrelationships among the fundamental characteristics*

The four common characteristics mentioned above are interrelated and mutually reinforcing. It is therefore difficult to understand the transplanting of "showcase modernness" and systematic orientation towards the domestic market without taking into account the weakness of national corporations, and vice versa. The convergence of the three factors, for its part, explains why, after several decades of industrialization, the countries still depend on natural resources for gaining access to the international market. The availability of those resources in turn influences the pattern of industrialization adopted.

From the standpoint of the formulation of new industrialization strategies, what is important is to assume the interdependency of these factors and deal with them as a whole. If, for example, attention is directed solely towards the need to open up domestic markets, the immediate effect will be an increase in "showcase modernness", a further weakening of the entrepreneurial base and an accentuation of insertion by way of natural resources. Moreover, it is arbitrary to try to strengthen the national entrepreneurial base by applying the seemingly effective expedient of transferring ownership of established enterprises to different agents (changing to private or to State ownership), while maintaining a pattern of consumption that is hardly compatible with growth, especially at a time when net capital flows to the region are disappearing and it has become so easy to place private savings abroad.

Regional and international experience suggests that if the general objectives of development are to be achieved, it is important to advance simultaneously towards the articulation of the domestic economy and society and towards a sound participation in the international economy. It is unrealistic to think that this participation can be achieved while partially excluding certain social sectors and regions, inasmuch as the latent social tensions will inevitably lead to uncertainty and, in the last analysis, jeopardize growth and investment. Moreover, concentrating attention entirely on domestic articulation at the expense of international insertion is very risky, both because of the increasing efficiency of communications and the resulting transmittal of expectations and behaviour patterns, and because of the even more decisive fact that the improvement of living standards is associated with the improvement of productivity. This has to do with the process of adoption of technical progress, which requires growth and is encouraged and facilitated by international insertion.

The pattern of industrialization that is characterized by the convergence of "showcase modernness", an easy domestic market, international insertion by way of natural resources and weak national entrepreneurs reflects the weakness of what has been defined, in a previous study

(Fajnzylber, 1983), as an endogenous nucleus of technological dynamization. To change this pattern would, in fact, involve reinforcing and articulating that nucleus and the goods and services subsystems of which it is made.

The national expressions of this pattern are the result of a combination of these common characteristics and the specific features of each society and of the industrial sector itself.

3. Differential features of the industrialization of Latin American societies

The industrialization pattern described above may be seen in societies that are very different from each other. The specific features of an industrialization process, as regards content, results, challenges for the future and strategies and policies required to face them are directly affected by the interaction of the common characteristics of the industrialization pattern and the unique features which distinguish national societies. We shall centre our attention on certain aspects in which the similarities and differences appear to exert the greatest influence: the type of natural resources, the characteristics of the agricultural system, the historical moment in which industrialization takes on momentum, the population dynamics, the size of markets and the prevailing political system.

a) *Type of natural resource*

The type of natural resource that nas enabled a country to gain access to the international economy and the type of enterprises involved in its exploitation influence, in varying degrees, the level, evolution and stability of foreign-exchange income; the distribution of the available foreign-exchange income among the different economic agents; the relative economic weight of the State in society as a whole and abroad, and variations in productivity. Consequently, the type and nature of the natural resource involved, and the particular form of enterprise developed to manage it will have a direct influence on the backward linkages in the industrial sector (raw materials, inputs and equipment), as well as on the population's demand for industrial goods.

A variety of situations have arisen in the different countries of the region. There are mining enclaves managed by outside entrepreneurs which have subsequently been transferred to public enterprises and have thus become a mainstay of public finance in foreign currency and, partially, in local currency. Agriculture has been predominantly devoted to industrial crops managed by large modern enterprises belonging to

national capital, which subsequently play a leading role in industrial development. In similar situations, entrepreneurial responsibility has been borne by enterprises that act on the international scene. The different ways in which the latter two situations affect the linkages and subsequent role of the State, as well as on the country's development style, are far from negligible. Also, in some situations, export-oriented agriculture has coincided with the production of basic foods for domestic consumption, with ownership, although relatively concentrated, including a large number of medium- and small-scale farmers. In this case, structural diversity is attenuated, income distribution is more favourable, and the relative autonomy of the society with respect to the State tends to be strengthened.

A very simplified typology of Latin American agriculture might show the distinction between the extreme cases of Argentina and Uruguay, on the one hand, and the rest of the region, on the other. Argentina and Uruguay have fertile lands that are fairly uniform and sparsely populated; their basic exports are consistent with the domestic diet of meat and grains, medium- to large-scale commercial enterprises are predominant, the peasantry plays a minor role, agricultural technology is at an advanced stage, and there is little technological dualism within agriculture or between agriculture and the rest of the economy. In the other countries, although there are subsystems similar to those just described, and they may be increasing in importance, industrial crops are prevalent, soil fertility varies greatly, irrigation plays an important role, large modern exploitations are combined with a significant peasant economy and a growing dependency on imports to supply basic food consumption (cereals); in this case, there is a strong technological dualism within agriculture and between agriculture and the rest of the economy.

b) *The belatedness of industrialization*

The particular point in history at which the process of industrialization is unleashed will also have a significant effect on its scope and content. Although reference is often made to the "belated industrialization" of the region, this generalization actually includes countries in which the process began at the end of the nineteenth century (the *Unión Industrial* of Argentina was founded in 1887, and the *Sociedad de Fomento Fabril* was started in Chile in 1883), others in which the process seems to have started after World War II, and other intermediate situations in which World War I and the crisis of the 1930s seem to have triggered the process. It could be argued that the later a country begins to industrialize, the more advanced will be the level of technology to which it has access. This advantage, however, is offset by the fact that there will

be a greater gap between the way in which a preindustrial society works and the requirements which the introduction of the industrial rationale entails. The longer a preindustrial society persists, the greater will be the lag and the latent social tensions. To this is added the fact that the modernization of health services will take place more rapidly than industrial development, and this will have an effect on population dynamics. In Latin America, the migration of the population from the tedium of farm life to the neon lights of the cities is reaching proportions never seen in the process of industrialization of the developed countries. It used to be that those who were excluded from progress were also excluded from access to information and political participation; this situation ended with the appearance of the transistor radio, which has brought both the urban poor and most of the peasantry the collective expectation of a modern lifestyle, represented by certain symbols of consumption and lifestyles. The social tensions generated in preindustrial society are reinforced in the early stages of industrialization with the inclusion of the poor in the shared expectation of entering into the modern age, even if only through the precarious means of physical contact with certain objects.

No reliable and comparable empirical data are available to assess the influence of the industrial sector on the economy of Latin America as a whole during the latter part of the nineteenth century. Nevertheless, from the sources available, it would appear that Argentina, Brazil, Chile, Mexico and Cuba had some degree of industrial development by the beginning of World War I, particulary in the area of textiles, clothing, mills, footwear and some metal tools. Between World War I, the crisis of the 1930s and World War II, industrialization took hold in Colombia, Peru, Costa Rica and Bolivia, and after World War II, it began in Venezuela, Paraguay, Honduras, Guatemala, Panama, Ecuador, Nicaragua, Dominican Republic, Haiti and other Caribbean countries. This is just a rough estimate but it gives an idea of the wide range of situations covered by the term "late industrialization", i.e., from countries that have been industrialized for more than a century to others with an industrial history of no more than three decades.

c) *The size of the national economy*

Evidently, the economic size of the different countries is a factor which explains some of the differences in their industrialization processes, especially in view of the fact that certain goods, such as widely used intermediate inputs (cement, steel, petrochemicals), automobiles and some mass-produced capital goods, require a minimum plant size that is hardly compatible with the domestic markets of some countries. Moreover, certain infrastructure works (transport, energy, communica-

tions) require a very high fixed investment, and this can be raised more easily in countries having a larger economy. In general, the smaller the size of the country the more specialized will be its industry and the more diversified the profile of the sectoral structure.

When these facts are considered in the light of the actual production structure of the region, it becomes apparent that the latter has not been a fundamental criterion in the design of industrial strategy and policy. Moreover, in many countries, other considerations, which are hardly justifiable from the economic or technological standpoint, have led to the development of industries the minimum scale of which is incompatible with the size of the country (steel, automobiles); at the same time, other industries which would have been better suited to the country, such as certain non- mass-produced capital goods, have not been developed. In fact, a highly fragmented structure of production and a high level of idle capacity were characteristic of several sectors and many countries of the region over long periods of time; this situation was made possible, from the economic standpoint, by the indiscriminate protectionism that prevailed in these economies. In the Central American Common Market, integration helped compensate for the limitations of domestic markets, and in the Andean Group, the same effect was achieved, although just barely. In general, the limitations arising from the small size of domestic markets have been aggravated by the impact of domestic policies, and not enough attention has been given, in practice, to efforts to compensate for these limitations through integration.

d) ***Political systems***

Judging from the texts of their constitutions, it would appear that most of the political systems of the region are based on the liberal doctrine of nineteenth-century Europe; this seems contradictory, considering that only a very small percentage of the population of Latin America has lived for more than a few decades under a representative democracy. Since the early 1980s, most of the region's population has succeeded in adopting this type of political system as a routine way of life. The fact that representative democracy has been almost absent as a structural feature in the political history of Latin America may help explain why regional integration has advanced so slowly; international and regional experience has shown that integration works better under democratic régimes. The most significant step taken recently has been the signing of an agreement between Argentina and Brazil, which contains certain qualitative innovations with respect to the region's experience with integration (ECLAC, 1987).

4. The industrial crisis of the 1980s

a) *Relative magnitude of the Latin American industrial crisis*

Mainly as a result of external factors, but also because of internal factors of a structural nature and of the economic policies implemented, the Latin American economies have, since 1980, been undergoing a crisis which has particularly affected the industrial sector. It was inevitable that the increasing scarcity of foreign exchange would most seriously affect that sector of production which required the greatest amount of imports and had a very limited export capacity and hence a heavy trade deficit. On the demand side, industry was disproportionately affected by the drop in national income and on the supply side, the scarcity of foreign exchange made it difficult to obtain inputs, parts and equipment, which became more expensive. Except in a few countries and sectors, inexperience and the nature of the production facilities concerned prevented industrialists from offsetting the decline of the domestic market with exports; to this problem was added the rise in interest rates and the overindebtedness carried over from the 1970s.

In 1985, Latin America's manufacturing product per capita was at an index figure of 89 (1980=100) and its GDP per capita was 93 (1980=100). The recovery attained by industry in 1984 and 1985 (2.6% and 1.9%, for the manufacturing product per capita) was not sufficient to restore the 1980 levels. Despite the notable differences in the performance of the different countries, the manufacturing product per capita in 1985 did not improve, with respect to 1980, in any of the countries for which comparable data were available.

Disregarding population growth and considering only the level of the manufacturing product, some extreme cases come to light, such as those of Colombia, Ecuador and Venezuela, whose 1985 manufacturing product was 8% higher than in 1980, on the one hand, and Bolivia, whose 1985 manufacturing product was 61% of the level attained in 1980 (53% in terms of the manufacturing product per capita).

b) *Explanatory factors and evolution of the industrial crisis*

This disparity in the development of manufacturing is explained, among other factors, by the degree of industrialization and integration of the industrial apparatus, the volume and sectoral distribution of investment and the industrial growth of the preceding decade, the nature and intensity of the negative impact of external factors (terms of trade, indebtedness, capital flows, interest rates and trend in the quantum of exports) and the domestic macroeconomic and sectoral policies adopted by the different countries during the crisis.

Brazil, which accounts for about one-third of the region's manufacturing product, has played a major role in the overall decline of the per capita product during the period 1980-1983 and in the recovery experienced in 1984-1985. That country saw its manufacturing product fall steadily up to 1983 and then recover steadily in the subsequent years; this was not the case, however, in most of the other countries of the region. In some of these, the decline has continued from 1980 to the present (Bolivia, Guatemala, Honduras, Panama); in others, after an initial fall, up to 1982-1983-1984, there was still no clear recovery in the following years (Argentina, Uruguay); and in others, there was little or no decline at the beginning, but the situation later deteriorated (1982-1983 in Mexico and Ecuador). Mexico drew up and implemented a programme explicitly designed to protect the production plant, and this mitigated and delayed the impact of adjustment. Another category would be that of those countries whose industrial recession never actually reached major proportions (Colombia, Venezuela and Paraguay): the lowest level of the manufacturing product in these countries was 96 for Colombia in 1982, 98 for Venezuela in 1981, and 97 for Panama in 1983; the manufacturing product per capita was 91 in Colombia and Venezuela in 1983 and 88 in Panama in 1985.

The case of Brazil is an exception. This is the only country of the region that had a trade surplus in the manufacturing sector during that period. It accounts for 50% of total exports of manufactures from Latin America, has attained the highest degree of relative development in the capital goods sector, and, because of its procyclical behaviour, it experienced both the fastest fall of the industrial sector during the period 1980-1983 and a steady growth during the following years, up until 1986. In 1984, when the world economy was stimulated by an increase in imports from the United States (27%), Brazil's exports to the United States rose by 54%, whereas exports from Latin America as a whole only rose by 7%. Exports from southeastern Asia to the United States rose by 34% during that year. The results obtained by Brazil were the fruit of a steady flow of investment over a period of 30 years, especially during the second half of the 1970s, which seems to have contributed to increasing the industrial sector's foreign exchange balance from US$3 billion in 1981-1982 to US$5 billion in 1983 and US$7 billion in 1984 (UNIDO, 1985).

Those countries whose industry was more dynamic during the 1970s, regardless of their level of industrialization and the size of their domestic market (Brazil, Mexico, Venezuela, Colombia, Ecuador, Costa Rica, Panama, Paraguay and Dominican Republic) showed a more positive evolution during the 1980s than the other countries (Argentina, Chile, Uruguay and Peru). In the latter, the external crisis overrode domestic factors.

Table 7

GROWTH OF MANUFACTURING VALUE ADDED PER CAPITA[a], BY ECONOMIC GROUPING AND BY DEVELOPING REGION, 1963-1985

(Average annual rates, in percentages)

	1963-1973	1973-1980	1981	1982	1983[b]	1984[b]	1985[c]	1980-1985
Developed market economies	4.6	1.0	-0.1	-2.9	2.4	6.1	2.5	1.6
Centrally-planned economies	8.6	6.1	1.9	2.1	3.7	3.5	2.7	2.8
Developing countries	5.1	3.5	-1.9	-2.0	1.0	7.0	3.7	1.5
Africa	4.5	2.7	-0.2	-0.9	-2.0	1.3	2.0	0.1
West Asia	6.2	2.3	-2.0	5.1	8.0	9.6	6.2	7.9[d]
South and East Asia	4.6	5.4	3.6	1.0				
Latin America	5.1	2.8	-5.1	-3.9	-5.3	2.6	1.9	-2.0

Source: Joint ECLAC/UNIDO Industry and Technology Division, based on data from UNIDO, *World industry: A statistical review, 1985* (UNIDO/IS.590), Vienna, 1985.

[a] At constant 1975 prices. [b] Preliminary figures. [c] Estimates. [d] 1982-1985.

c) *Changes in the sectoral profile*

The different trends in the industrial sector also affect the sectoral profile. Before the crisis, the most dynamic sectors in the region were transport equipment, chemicals and capital goods, while the least dynamic were textiles, clothing and leather. This profile, which is similar to that of the developed countries, originated mainly in the more industrially advanced countries of the region. For example, in Colombia, whose good economic performance we have mentioned, the food sector was one of the most dynamic during the pre-crisis period, and this was also the case in the less industrialized countries.

From the standpoint of the changes which occurred in the sectoral profile, three major developments stand out during the period 1980-1983: the transport equipment and capital goods sectors moved over into the category of less dynamic sectors, which is understandable, given their role in the investment process and the complementary impact of the rise in interest rates and the fall in the GDP; the industrial chemicals sector (ISIC, 351) remained dynamic both before and during the crisis, which is an indication of the widespread use of this type of goods in overall production activities (agriculture, mining, construction, non-durable consumer goods); and, in the third place, the food sector, whose growth is associated with basic survival needs, in 1980 became a highly dynamic sector in such different countries as Brazil, Mexico, Chile, Dominican Republic and Venezuela.

In the region as a whole, the more dynamic sectors during the crisis have been the food sector and two intermediate input sectors, i.e., chemicals and steel, the latter being influenced by Brazilian exports. As some of the countries recovered, around 1984 and 1985, it appears, despite the lack of complete information, that the pre-crisis production profile was reconstructed, with the automobile industry showing a marked recovery and in some countries, especially Brazil, with the capital goods sector also improving greatly.

So far, there are no signs of industrial recovery in most countries of the region, and it would be premature to try to forecast the changes that will take place in the production profile, although certain sectors, such as the automobile industry and some industries producing widely used intermediate inputs (e.g., petrochemicals and steel) will no doubt undergo far-reaching rationalization processes, in addition to the overall reorganization of industry that is bound to take place.

d) ***Impact on scientific research and technology***

Perhaps the most revealing feature of Latin American industry is the fact that, in marked contrast with the situation in the advanced countries, expenditures on research and technological development closely associated with the public budget have fallen steadily, even in Brazil. This trend has been quantified in respect of Argentina, Brazil, Mexico, Chile, Peru and Venezuela.

This shows how little social and political importance is attached to such activities in the region, and how weak is the link between research and development activities and industrial production for the domestic market. In regard to countries which rely on the industry sector for their international competitiveness, it is inconceivable that budgetary constraints should lead them to sacrifice resources for scientific and technological research, which plays such a decisive role in a country's position on the international market.

e) ***General description of the current situation***

The current situation of the Latin American industrial sector might be described as follows: relatively high margins of idle capacity in several countries and sectors; weak financial position of firms associated with the decline of the domestic market; overindebtedness; high interest rates; and, in several countries, a serious impact of successive devaluations on imports and on the service of the foreign debt.

The collapse of the rate of investment, which in several countries was barely high enough to allow for replacement, has hastened the obsolescence of the industrial park, inasmuch as the existing equipment was aging precisely at a time of rapid technological change (on the

international scene) in the capital goods sector. To this must be added the weakening and, in some cases, the dismantling of design groups in manufacturing firms and engineering companies, and the deterioration of the level of training of that part of the industrial labour force which was obliged by the unemployment situation to move into other activities.

In the public sector, in addition to the lack of investment resources, attention was centered on trying to solve short-term problems; this inevitably led to neglect in drawing up the strategies that would be necessary in order to provide a minimum of guidance for entrepreneurial activity. Moreover, the decline in public-sector wages and the restrictions placed on hiring may have helped eliminate unnecessary activities, but they have also weakened public support for certain key sectors, such as that of technological development. This combination of unfavourable factors seems to have had the most serious effect on smaller companies which had weaker links with government departments.

The issue is not one of specific problems affecting only certain agents or sectors, but rather, what is being questioned is the entire industrial system —the public and private agents of production, finance, and technology—, as well as the validity of the policies required for industrialization. The countries are faced simultaneously with the challenge of reactivating the entrepreneurial sector, reorienting production activity, promoting the articulation of industry with natural resources and with services, thinking up strategies and policies, and strengthening different public and private institutions which influence the operation of the industrial sector.

II. INDUSTRIAL REORGANIZATION AND INTERNATIONAL TECHNOLOGY: THE BLACK BOX OF TECHNICAL PROGRESS

1. Technical progress and manufacturing

Efforts at innovation and technological development are not evenly distributed throughout production activities, but are concentrated in the manufacturing sector. Although in most industrialized countries, industrial production accounts for between one-fourth and one-third of the gross domestic product, expenditures on research and development in the sector absorb over 90% of the resources allocated for this purpose (table 8). This means that the technology content of the manufacturing sector represents three or four times more effort than the average for overall economic activity.

This basic fact explains why the demand for manufactured products has grown more than the demand for natural resources and, along with other factors, it affects the evolution of the terms of trade in respect of the manufacturing sector and the different natural resources sectors. In practice, as shown in figure I, there has been a definite erosion in the relative prices of natural resources, including the well-known case of the petroleum sector. This downward trend, formerly associated with developing countries, now appears to be favourable for some developed countries and detrimental for others. Some countries in the north are in a position similar to that of the southern countries, while some of the southern countries now have a market position similar to that formerly enjoyed by the northern countries.

Within the manufacturing sector, as shown in table 9, efforts at introducing technological improvements are concentrated in certain branches, i.e., not all branches of industry show the same density of technological know-how and effort. Chemicals and the branch falling under the generic term "metal products and engineering", which mainly includes capital goods, transport equipment and home appliances, account for no less than 80% of total expenditure on research and development, whereas these branches account for no more than 40% of

Table 8

PRODUCTION AND RESEARCH AND DEVELOPMENT EXPENDITURE DISTRIBUTION BY MAJOR ECONOMIC ACTIVITY, 1979

(In percentages of total)

	Agriculture	Mining	Manufacturing	Infrastructure	Other services
United States					
Industrial production	3.8	3.6	28.5	16.2	44.7
R & D expenditure	...		96.4	3.6	...
Japan					
Industrial production	5.1	0.7	33.7	20.5	40.0
R & D expenditure	0.2	0.3	91.8	7.6	...
Federal Republic of Germany					
Industrial production	3.3	1.3	44.6	17.9	32.9
R & D expenditure	...	2.3	92.2	2.0	1.5
France					
Industrial production	5.9	0.9	34.5	17.9	40.7
R & D expenditure	0.6	0.7	93.0	4.0	1.7
United Kingdom					
Industrial production	3.1	3.7	33.6	21.0	38.6
R & D expenditure	...	1.7	90.4	7.0	0.9
Italy					
Industrial production	8.2	...	36.4	21.2	55.4
R & D expenditure	0.0	0.6	81.4	6.7	18.0
Canada					
Industrial production	5.6	6.5	27.0	21.5	60.9
R & D expenditure	-	9.4	78.2	...	12.4
Netherlands					
Industrial production	5.7	0.2	34.3	20.2	59.0
R & D expenditure	0.7	2.4	90.1	...	6.8
Sweden					
Industrial production	5.0	0.7	34.1	22.3	60.2
R & D expenditure	1.6	0.5	91.8	5.0	6.1

(Table 8 concluded)

	Agriculture	Mining	Manufacturing	Infrastructure	Other services
Switzerland					
Industrial production	...	...	...	...	...
R & D expenditure	0.0	...	99.4	0.0	0.6
Australia					
Industrial production	7.1	5.7	22.3	17.4	64.9
R & D expenditure	-	4.0	64.3	14.4	31.7
Belgium					
Industrial production	3.0	0.6	33.0	23.4	63.4
R & D expenditure	0.7	0.3	87.4	2.1	11.6
Austria					
Industrial production	6.0	0.7	37.4	21.9	34.0
R & D expenditure	0.4	0.9	92.3	1.3	5.1
Norway					
Industrial production	6.3	11.3	22.0	27.1	33.3
R & D expenditure	1.0	5.8	79.1	11.0	3.1
Denmark					
Industrial production	7.0	0.2	26.6	25.2	41.0
R & D expenditure	0.5	-	78.6	2.2	18.7
Yugoslavia					
Industrial production	...	...	32.5	...	...
R & D expenditure	...	...	...	...	...
Finland					
Industrial production	11.2	0.6	34.4	23.0	30.9
R & D expenditure	1.0	1.6	90.5	4.4	2.5

Source: Joint ECLAC/UNIDO Industry and Technology Division, "Ciencia y tecnología en la OCDE, posición relativa de América Latina", *Industrialización y desarrollo tecnológico*, No. 1, Santiago, Chile, September 1985.

total production activity. Consequently, the technological density of these branches is twice that of manufacturing as a whole and six times that of overall production activities. These are the branches that have experienced the greatest growth, during the postwar period, in different types of countries of varying levels of development; in addition they are the

Figure I

WEIGHTED PRICE INDEXES OF PRODUCTS, 1950-2000[a]

(Constant dollars 1985 = 100)

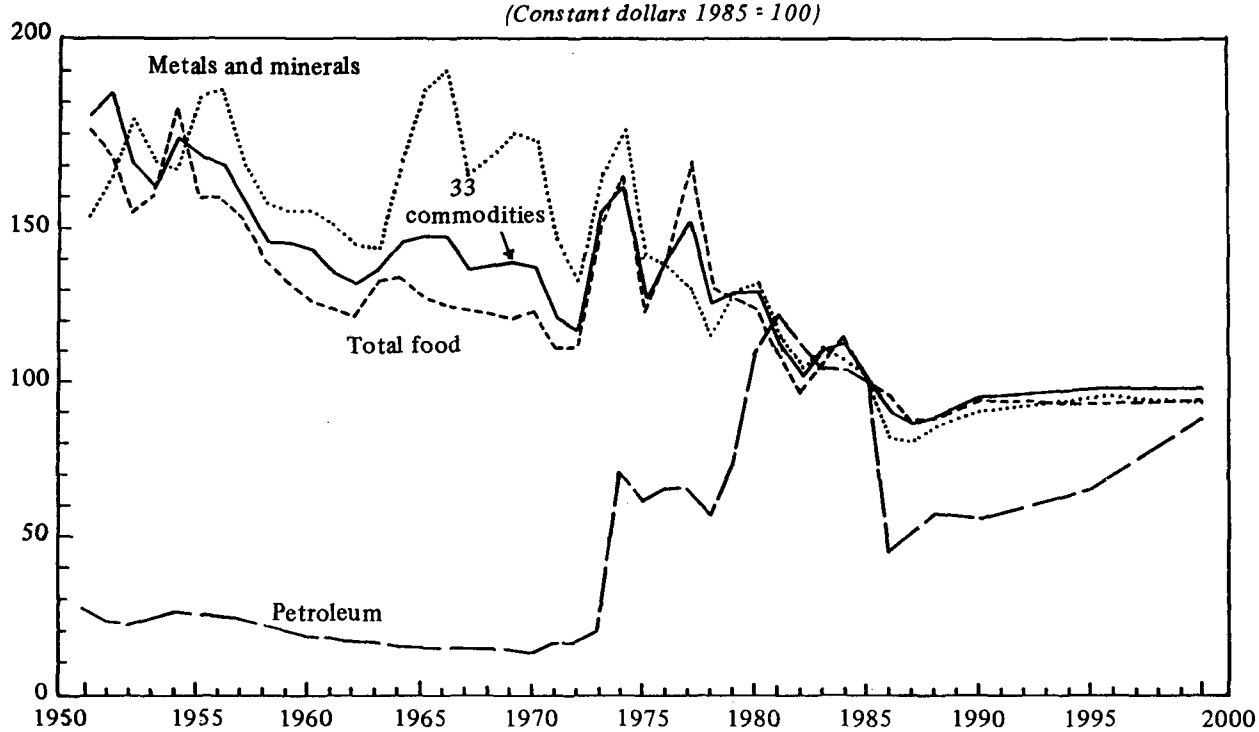

Source: World Bank.

[a]1986-2000: World Bank forecast.

Table 9

COMPARATIVE STRUCTURE OF RESEARCH AND DEVELOPMENT IN THE BUSINESS ENTERPRISE SECTOR BY INDUSTRY GROUP,[a] 1981

(In percentages of total)

	Electrical	Chemicals	Aerospace	Other transport	Basic metals	Machinery	Chemical-linked	Other manufacturing	Services
United States	20.2	13.9	22.6	10.8	3.1	20.2	3.1	3.1	4.1
Japan	24.5	18.1	0.0	17.2	8.3	13.3	7.2	4.2	6.6
Federal Republic of Germany	23.9	23.1	6.2	14.1	4.5	16.1	3.2	1.9	2.4
France	24.7	18.8	17.5	11.8	3.3	9.2B	5.3	2.1	5.8
United Kingdom	31.1	16.1	20.1	5.0	2.4	12.0	4.7	2.1	4.8
Italy	14.9	23.2	9.1	14.4	2.5	10.0	3.9	4.2	16.5
Canada	22.5	18.0	12.3	2.4	6.0	7.3	3.9	5.1	12.2
Spain	16.3	22.8	37.6	19.6	6.9	5.5	7.2	5.1	14.1
Australia	10.9	15.6	...	9.4	10.0	5.8	5.8	3.9	32.0
Netherlands	...	34.2	...	...	...	...	7.2	0.7	7.5
Turkey	...	...	...	...	...	...	...	...	...
Sweden	23.1	9.8	...	21.9	7.1	14.7	3.5	6.4	11.1
Belgium	25.1	34.0	0.4	2.5	8.1	5.9	6.3	5.0	12.2
Switzerland	24.7	48.5	...	0.6	4.8	16.0	2.6	0.8	2.0
Austria	22.8	12.2	...	9.3	8.9	23.8	9.3	5.4	7.2
Yugoslavia	...	...	...	...	...	...	...	...	...
Denmark	11.8	18.1	...	3.3	2.0	22.9	8.6	13.7	19.5
Norway	20.1	9.4	...	5.1	11.4	15.2	4.6	4.3	11.2
Greece	5.9	20.3	8.0	5.8	12.4	0.9	4.6	11.6	30.6
Finland	20.9	16.1	0.2	3.0	8.2	24.6	7.8	12.0	5.7
Portugal	16.8	22.8	0.0	7.9	2.9	3.3	3.9	4.2	29.0
New Zealand	9.4	11.2	0.2	4.2	5.8	3.3	24.0	5.0	34.4
Ireland	22.6	17.2	0.2	3.3	6.0	8.1	26.6	5.8	8.5
Iceland	31.8	13.0	...	...	27.3	1.3	8.4	7.1	0.1
Total OECD[b]	**22.0**	**17.0**	**15.0**	**11.5**	**4.0**	**17.0**	**4.0**	**3.0**	**5.5**

Source: OECD/STIIU data bank, December 1985.

[a] The sum of the industry groups indicated may be less than 100%; the difference representing R&D in agriculture and mining. The detailed composition of the industry groups: electrical equipment: electrical machinery, electronic equipment and components (computers excluded). Chemicals: chemicals, drugs and petroleum refineries. Aerospace (missiles included). Other transport: motor vehicles, ships and other transport. Basic metals: ferrous metals, non-ferrous metals, manufacturing of metal products. Machinery: tools, office machinery and computers, machinery n.e.c. Chemical-linked groups: foodstuffs, beverages and tobacco, textiles and clothing, rubber and plastics. Other manufactures: stone, clay and glass, paper and printing, wood, cork and furniture; other manufacturing. Services: utilities construction, transport and storage, communications, commerce engineering services and other services. [b] Partly estimated by OECD, except for the Netherlands.

most dynamic branches in international trade, i.e., they account for an increasing proportion of industrial output and world trade; and, lastly, they are the branches in which international marketing has grown the fastest.

Figure II shows the sectoral evolution of industry in the main industrialized regions for the period 1970-1987. In all of them, electrical equipment, the most dynamic component of which is electronics, shows very rapid growth. Leaving out Japan, in which the transformation of the production sector was based on electronics, it will be noted that in both the United States and Western and Eastern Europe, plastics and industrial chemicals, in addition to electrical machinery, have been primarily responsible for the transformation of industry.

Consequently, in the international economy as a whole, and independently of the socioeconomic system concerned, the sectoral content of technical change has been marked by two clearly-drawn axes which are common to a wide range of countries. In the first place, there is the chemicals sector, stimulated by the relative drop in the price of oil between 1950 and 1973, which despite the crises of 1973 and 1979 continued to be very dynamic (although less so than in the past), and led to an increasing substitution of synthetics for natural products. In the second place are the metal products and engineering branches, which include transport equipment (mainly automobiles) and home appliances. These are the durable consumer products which are characteristic of the lifestyle which has been spreading, since World War II, from the United States throughout the world. Finally, there are capital goods, which have greatly facilitated technical progress, thus making it possible to raise productivity throughout production activities as a whole and deal with the increasing shortage of manpower, its high cost, the pressures of trade unions and the political power of the labour sector. All the countries have also felt the influence of the intense international competition associated with the dissemination of technical progress and the industrialization of new regions and countries, which encourage modernization and the growth of the capital goods sector.

To explain increases in productivity —which in economic jargon refers to what engineers call technical progress—, we must identify and isolate those sectors which are mainly responsible for such increases. If we were to ignore the role which specific sectors play in this process, there would be no point in trying to analyse technical progress and the resulting increase in productivity, which is one of the central factors in economic growth and change.

Macroeconomics, which is the main source of inspiration for economic policies, is, in fact, based on the assumption that sectoral disaggregation serves no purpose in achieving the analytical goals pursued, which have to do mainly with the definition of short-term macroeconomic

Figure II

NORTH AMERICA, WESTERN EUROPE, EASTERN EUROPE AND JAPAN: INDUSTRIAL STRUCTURAL CHANGE, 1970-1987

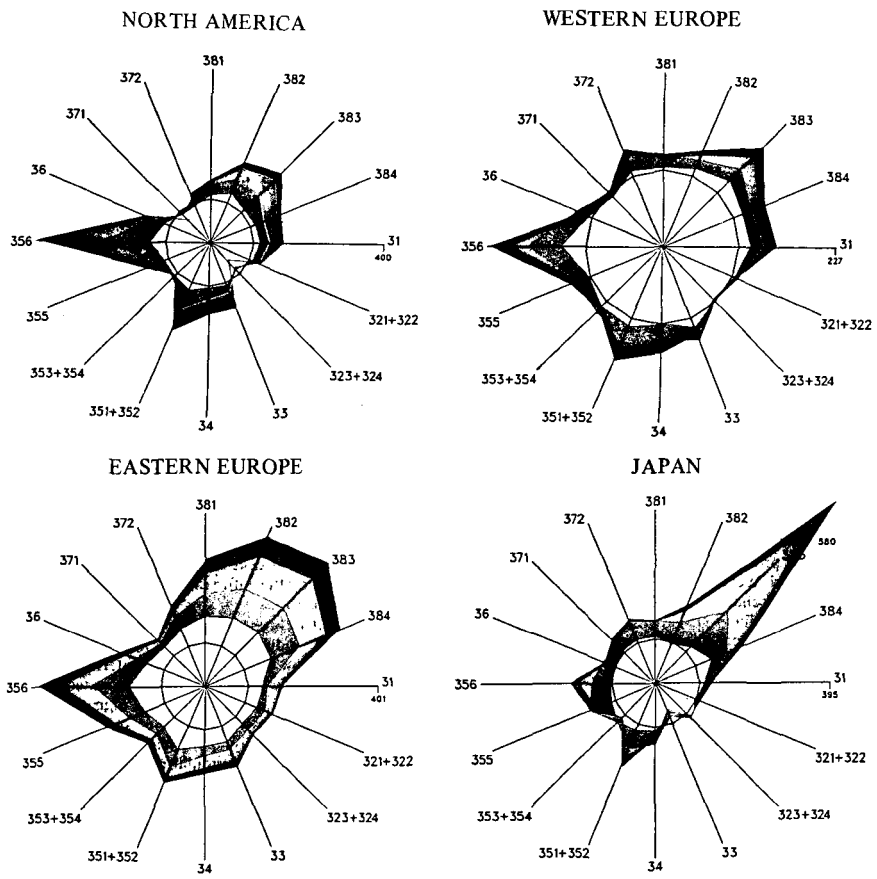

Key:

ISIC code (branches):

31 (Food products)
321, 322 (Textiles)
323, 324 (Leather industries)
33 (Wood and furniture)
34 (Paper and printing)
351, 352 (Chemicals)
353, 354 (Petroleum and coal)
355 (Rubber products)
356 (Plastic products)
36 (Non-metal mineral products)
371 (Iron and steel)
372 (Non-ferrous metals)
381 (Metal products)
382 (Non-electrical machinery)
383 (Electrical machinery)
384 (Transport equipment)

Forecast 1970–1975 1975–1980 1980–1985 1985–1987

urce: UNIDO, *Industry and Development: Global Report 1986*, Vienna, 1987.

ote: This diagram is based on the value added in 1980 constant prices. For each branch an index number was calculated from the base year 1970. The index determines the distance from the center of the star diagram. For each year the indexes are connected by a line representing the typical "shape" of expansion for the specific country. Since the size of expansion (absolute values of index numbers) is different in each country, a different scale is used in each diagram. The two numbers in the box on the upper right-hand side of the plot are g, the average annual growth rate for the period 1970 to 1987; and Θ, the index of structural change, for the same period.

equilibria among variables which result from adding up the effect produced in the different sectors by the various agents participating in economic activity. Macroeconomics is concerned with defining to what extent it will be possible to achieve equilibria among product, consumption and investment, and to balance public accounts and short-term external accounts. Some authors try to explain their indifference to technical progress by referring to the trauma of the underutilization of resources that is associated with the crisis of the 1930s. According to Gordon (1980, p. 11), there may be no issue on which the thinking of the 1940s appears more old-fashioned, from our point of view, than that of productivity and economic growth. Increased productivity was considered not as the source of economic progress but rather as the origin of unemployment. This disregard for the relationship between productivity and long-term development was based on an obsessive concern that resources might be underutilized and on misgivings about the ability of the economy to stand up under full employment. Rosenberg, for his part (1986, p. 20) sees the indifference to technical progress as a basic characteristic of the neoclassical conceptual framework. According to him, the neoclassical tradition in economics, which began in the late nineteenth century, set aside the classical concern for the prospects of long-term economic growth and centered attention on a study of the potential implications of maximization within a static framework. A constant concern, which has dominated this line of thinking up to now, is that of finding out how a market economy can generate forces that will enable it to recover its balance once it has been disturbed. Considerable attention has been given to the analysis of those conditions which determine the stability and efficiency of the state of equilibrium towards which an economy is leaning. Neoclassical economics, however, has been concerned mainly with comparing successive equilibria, and does not envisage an analysis of the readjustment process itself. If it is considered at all, technological change is usually treated as a unique innovation, of an exogenous type, which brings down costs and to which the economy eventually adjusts.

Some of the most respected contemporary economists acknowledge that the weakness of macroeconomics lies in the analysis of economic growth and the raising of productivity, and that this is due, among other reasons, to its failure to allow for the sectoral disaggregation that would make it possible to isolate those factors which most influence this process. Nevertheless, as Samuelson admits (1980, p. 693), the theory of growth is still on the frontier of economic knowledge, and experts still do not agree as to what is the underlying mechanism of past and future trends in development.

Recognition of the need to deal with this shortcoming is evidenced in the convergence of viewpoints on the need to work on sectoral

disaggregation in order to open the "black box" of technical progress. The linkage between technical progress and economic and social development has been one of the central ideas governing the work of ECLAC.

2. Technical progress and the scope of macroeconomics

After World War II and up to the mid-1960s, productivity grew at a rate of no less than 3% per year. After that, the rate of growth fell steadily. From the mid-1970s up to the present, it has been very low in the United States, but has recovered in other industrialized countries.

This phenomenon has been a subject of general concern; during the 1980s, the question of productivity and technical progress has, for the first time, received special attention at the summit meetings of industrialized countries. According to Jorgensen (1986, p. 69), the abrupt decline of economic growth in the industrialized countries poses a problem which, owing to its scientific interest and social importance, is similar to the problem caused by massive unemployment during the great crisis of the 1930s. Traditional methods of economic analysis have been tried and found useless. Evidently, a new conceptual framework must be found in order to explain this in economic terms.

Table 10 shows the comparative situation, from the economic standpoint, of different countries having different levels of development. Countries in the lower middle-income group have a per capita income of between US$500 and US$1 500; those in the upper middle-income group range between US$1 500 and US$5 000, and the industrial market-economy countries have per capita incomes of from US$5 000 or US$6 000 up to as much as US$16 000 (1984). From the standpoint of macroeconomic indicators, the profiles of these three groups of countries do not appear to be too different. There are two main aspects in which their differences may be noted: the public sector plays a stronger role in the countries that have higher levels of development and per capita income, and the degree of openness, measured by the ratio of total exports of goods to GDP, seems to be lower in the more industrialized countries. Paradoxically, these two differences are inconsistent with the type of recommendations currently being made to the developing countries, i.e., to drastically reduce the role of government and increase the degree of openness. The similarities between groups of countries seem greater when pairs of developing and developed countries are compared, in cases in which the differences in macroeconomic profiles are almost imperceptible. If Panama is compared with the United Kingdom, for example, the differences will be seen to be much smaller than one would think, considering the nature of these two countries; the same is true of

Table 10

MACROECONOMICS SIMILARITIES AND STRUCTURAL DIFFERENCES, 1984

(As a percentage of GNP)

	Public consumption	Private consumption	Gross domestic investment	Gross domestic savings	Exports of goods and non-factor services	Total current revenue Central government	Total current expenditure Central government	Overall Central government surplus/ deficit[a]
Lower middle income economies	13	71	19	16	21	21	21	-5
Upper middle income economies	14	65	22	26	26	24	27	-6
Industrial market economies	17	62	21	21	18	27	30	-6
Panama	19	64	18	17	36	30.2	40.4	-12.1
United Kingdom	22	61	17	17	29	37.6	41.4	-5.0
Costa Rica	16	61	25	24	34	24.3	26.4	-2.2
France	17	64	19	19	25	42.7	44.8	-3.6

Source: The World Bank, "World Development Report 1986", Washington, 1986, tables 5, 22 and 23.
[a] 1983.

Costa Rica and France. If it were not known which country the figures referred to, even an expert observer might make the mistake of attributing the figures for one country to the other.

What does all this mean? It means that, from the standpoint of macroeconomic analysis, the differences between countries whose structures are so different, as in the cases mentioned, are not useful for purposes of defining short-term macroeconomic equilibria. To make a rough analogy, one might say that it would be like the case of a physiologist who decided to measure the importance of the different organs of the human body according to their weight, and suggested that in order to evaluate the condition of the human body, one might simply take the arithmetical sum of the weights of the different organs, without taking into account the role each one performs. In the economic sphere, to disregard the fact that certain sectors of production play a special role in promoting technical progress would be to disregard no less than one of the factors which determine the growth and the economic and social transformation of a country. A more prosaic analogy might be that of a specialist in automobile mechanics saying that he knew almost everything about how a car works, but almost nothing about the engine. The mere acknowledgment of this limitation at least represents a significant step forward, and this is happening more and more often (Landau and Rosenberg, 1986).

The issue is a methodological one that is not at all trivial. At a time when the industrialized countries are making a systematic effort to accelerate the adoption of technical progress, the Latin American countries —which cannot reconcile growth with equity and which are characterized, in fact, by their relative inability to absorb, process and develop technical progress— are obliged to use a theoretical framework, in setting economic policy, that avoids the very issue that is at the heart of their development problem. Consequently, it would be advisable to work towards drawing up an analytical scheme that would complement the role of macroeconomics in the fundamental matter of watching out for equilibria in short-term overall figures, without trying to make general interpretations, and thus make it possible to systematize, or at least organize, the concept of linkages between the pattern of industrialization and development a country follows and the degree to which it achieves its two central objectives, i.e., growth and equity.

3. Fundamental trends in the transformations

During the 1950s and 1960s, when the industrialization profiles of Latin America were taking shape, the international economy was characterized by vigorous economic growth and increasing productivity, which in turn

led to a rapid internationalization of trade and of industrial production. From the standpoint of consumption, production and energy, the basic technological frame of reference was set by the United States, which in 1950 generated 60% of world manufactures; Europe, Japan and the developing countries, each in its own way (Piare and Sabel, 1984) followed this trend towards growth which made it possible to expand markets, disseminate technical know-how and extend corporate investments beyond the countries of origin. From the late 1960s and the early 1970s on, there began a decline both in economic growth and in productivity increases, and financial resources began to flow independently of the actual economic situation; this trend was furthered by the establishment of floating exchange rates in 1971, the recycling of oil resources after the crises of 1973 and 1979 and the deficit of the United States Government.

In the economy itself, attention was centered on the drop in the rate of growth of productivity (Zysman and Tyson, 1983) and on the implications of this phenomenon in terms of inflation, the decline of investment, the difficulty of overcoming economic and social constraints and the reduced competitiveness of the United States and Europe *vis à vis* Japan and the newly industrialized countries. To explain this phenomenon, more and more factors were explored, including technical progress, the relationship between savings and investment, corporate management, skilled labour and, in recent years, product quality and the production process, which would appear to influence both the manufacturing process and the use of inputs.

There are obvious differences among the problems faced by the United States, by Japan and by Europe. In the United States, the problem of competitiveness became especially serious; the problem began with products of lower technology content (clothing, footwear and textiles), but it currently affects products with an average technology content (steel, automobiles, naval industry) and those of high technology content (computers, semiconductors and telecommunications equipment). Productivity has grown slowly, but the capacity to generate jobs is relatively high —15 million jobs over the last decade—, although these are in activities with lower average wage rates than the jobs generated during the preceding period (mainly in services). Between 1973 and 1980, productivity in the manufacturing sector rose by 2.1%, and hours worked rose at a rate of 1.2% per year.

In Europe, the central problem is unemployment, but productivity grew at high rates in Western Germany, Italy and France; the rates in the United Kingdom were low compared with the United States (2% and 5% per year, respectively). Hardly any new jobs have been generated in Europe over the last 16 years, and employment in the industrial sector has fallen at a rate of approximately 2% per year.

For different reasons —lack of competitiveness, and unemployment— protectionist trends were accentuated in the United States and Europe, and this led Japan, whose main markets they are, to envisage a change in its growth rate by attaching greater importance to its domestic market.

Since the late 1970s, the industrialized countries have begun to accept the view that technological change plays an essential part in policies aimed at achieving structural change. At the Tokyo summit meeting held in May 1986, emphasis was placed on the need to apply effective structural readjustment policies in all the countries and in all economic activities, in order to promote economic growth, employment and the integration of domestic economies into the world economy. It was pointed out that such policies should include technological innovation, remodeling of the industrial structure, and the expansion of trade and of direct foreign investment.

Contrary to what sometimes happens in Latin America, this theoretical statement has actually been carried out in concrete terms. Indeed, the expenditures on science and technology made by the developed countries have been growing steadily since the 1970s, both in terms of the GDP and of gross fixed capital formation and —despite austerity policies— even in terms of total public expenditure (OECD, 1986). More and more resources are being concentrated in the manufacturing sector and, within it, in the high-technology sectors. From 1970 to the present, production and international trade in these sectors (consumer and industrial electronics, computers and semiconductors, scientific instruments and pharmaceuticals) have grown much more than in other sectors.

The historical trend as regards the influence of technical progress on the utilization of natural resources and manpower has been accentuated (figure I). In early 1986, the price of raw materials, except oil, was at a level similar to that of the great crisis of the 1930s, and the price of oil, which between 1950 and 1973 had fallen by 50% compared with manufactures, had recently returned almost to pre-1973 levels. A recent study shows that the content of raw materials per product unit has been falling steadily, at a rate of 1.25% per year, so that the amount of raw materials required is now estimated at approximately 40% of the level used at the beginning of the century. As a matter of fact, this trend seems to have accelerated over the last few years. In 1984, Japan used only 60% of the amount of raw materials it would have needed to attain the same level of industrial production in 1973 (Drucker, 1986). In 1977, the production of petrochemicals in the United States was equal to the production of steel, and now it is equivalent to the sum of the production of steel, aluminium and copper. Over the past 10 years, the consumption of energy per product unit has fallen by 25% in the United States and oil consumption has fallen by 33%.

Projections of the terms of trade for the remainder of the decade indicate that this trend will continue, with the consequences that are to be expected for the countries that have entered the world economy by means of their natural resources, including, since 1982, the United States (which is a net exporter only of agricultural products and has a deficit as regards industrial, energy and mining products). The countries that will benefit the most are those which participate on the international market with a surplus in the manufacturing sector.

As regards the impact of technical progress on employment there are several different projections, but they all seem to indicate that in future less manpower will be needed to reach similar levels of production. In Japan and in the large United States corporations, estimates project a doubling of production over a period of 15 or 20 years, with the number of jobs falling by between 25% and 40%. Previously labour-intensive sectors are rapidly becoming capital-intensive (textiles, clothing, electronic assembly plants). Some high-technology sectors (semiconductors and fine chemicals) use less manpower than an automobile factory operated entirely by robots. This, along with the generalized automation of different sectors of production, reduces the comparative advantages based on the availability of cheap labour.

Significant changes are also taking place in the institutional environment, as a result of the changing channels of access to technological progress on the part of Latin America. The trend is to move away from a technology pattern characterized by highly standardized production based on low and decreasing energy costs towards a system based on the articulation of small but very flexible production modules having a higher content of scientific know-how and made possible by the sharp drop in the cost of processing, transmitting and organizing information. This phenomenon is evident in the great contribution made by small and medium-sized companies working in state-of-the-art technology (microelectronics and genetic engineering); schemes providing for co-operation in research and development among companies from different countries which work in the same sector (automobile industry); joint operations for the production of high-technology goods among companies working in different sectors (robots for the automobile industry, computers, machine-tools and electronics); co-operative research programmes among companies in different countries and the governments concerned (the European EUREKA programme); and the increasing lack of differentiation between industry and services in data-processing technologies (telecommunication companies moving into computers and vice versa) (Cohen and Zysman, 1987).

The developed countries share a concern for restructuring their production in order to recover or consolidate their international position, but they do this from very different angles and with many contradictions.

For Japan, restructuring is a historical feature of the industrialization process which is implemented through a succession of movements of resources towards those sectors which are expected to be more dynamic on the international market, with special attention being paid to activities that will bring about technical progress. There is a similar concern, although expressed in different ways, in the Federal Republic of Germany, and in some sectors in France which have to do with the purchasing power of the public sector. In the United States, however, restructuring implies theoretical and institutional innovation, in response to a series of adjustments required by the market. According to this view, the legitimate tools of structural readjustment are the macroeconomic variables. It seems from recent estimates, however, that the devaluation of the last few years —intended to reduce the heavy trade deficit— has been inadequate, and has opened the way for a recurrence of protectionist pressures which, to a large extent, act against the formulation of positive restructuring policies.

Despite the aforementioned differences, the developed countries have certain basic features in common: they are economically and socially articulated societies (with a relatively equitable income distribution, high levels of schooling, relatively small differences in productivity among sectors and enterprises, and a variety of patterns of social and political participation and representation), their patterns of consumption and production are generated endogenously, and their participation on the international market is characterized by a highly specialized trade in manufactured goods. Their industrial restructuring is therefore directed at a limited common objective, i.e., to increase or consolidate their international competitiveness within the context of internally articulated societies.

In brief, the industrialized countries have embarked on a process of industrial restructuring in which the country that served as a model, as regards consumption, production and technology (the United States) has lost its competitiveness in the manufacturing sector, has become a net debtor, and absorbs the resources generated by countries that have a surplus, mainly Japan and West Germany, plus the resources which, for economic and extraeconomic reasons (including the service of the debt and the exodus of capital), flow into it from the less developed countries. Official policy stresses the need to restructure industry in order to adapt to technological change and maintain international competitiveness, on the basis of an analytical scheme in which macroeconomic factors are given priority.

In practice, however, an analysis of the policies adopted by the OECD countries will show that they include several elements of sectoral and even microeconomic interventionism (OECD, 1982). Priorities are set in certain sectors (winners); subsidies are granted for research and

development in certain activities; non-tariff barriers are established for specific items; the purchasing power of the public sector is explicitly used as a promotional tool; a wide range of fiscal incentives are offered; companies that are undergoing financial difficulties are rescued; the leading European corporations in high-technology sectors demand five to seven years of governmental protection, in addition to the guarantees established by patent legislation, in order to ensure the survival of their newly established industries; in the United States, steel companies request extended periods of protection in order to revitalize the sector; in Japan, subsidies are granted for purchases of automated equipment for small and medium-scale industry, and in the United States, Europe and Japan, expenditures on subsidies to agriculture are comparable to the net transfers of financial resources from Latin America to other countries over the last few years (approximately US$30 billion). The discrepancy between the recommendation that neutral, uniform policies based on real prices be implemented, and the actual practice in the countries where these recommendations originate is even more notable, considering that these are economically and socially articulated societies whose participation in the international economy is mainly based on their manufacturing sector.

Latin America, for its part, must deal with an international environment that is much less favourable and much more complex than it was during the pre-industrial stage, in several regards, i.e., the dynamism of the world economy, financial flows, trends in technology, standardization of a lifestyle rapidly disseminated by communications and, finally, the prevailing influence of a school of economic thought which is not even applied in practice in the economic policies of the advanced societies, and which does not reflect the true situation of the Latin American countries.

Whatever may be the rate of economic growth of the developed countries, there is reason to believe that it has less impact on the Latin American economy than it did in the past, because of the protectionist tendencies of the developed countries, the effect of technical change on the demand for natural resources, the reduced competitiveness of labour-intensive sectors and the disappearance of the financial flows which had previously allowed for imports to increase more than exports. There also seems to be a consensus to the effect that the rate of growth of the developed countries is not as high as it was during the last few decades.

For reasons that have to do with their own process of industrial restructuring and with the intensification of international competition, the developed countries must now channel investment resources towards their own economies. The region's efforts to serve the interest on the debt (approximately 4% of the GDP, 1/4 of investment, almost double the amount of net investment) have not only aggravated the deterioration of the terms of trade, as a result of the excessive growth of exports of

Figure III

LATIN AMERICA: NET INFLOW OF CAPITAL AND NET TRANSFER OF RESOURCES

(Billions of dollars)

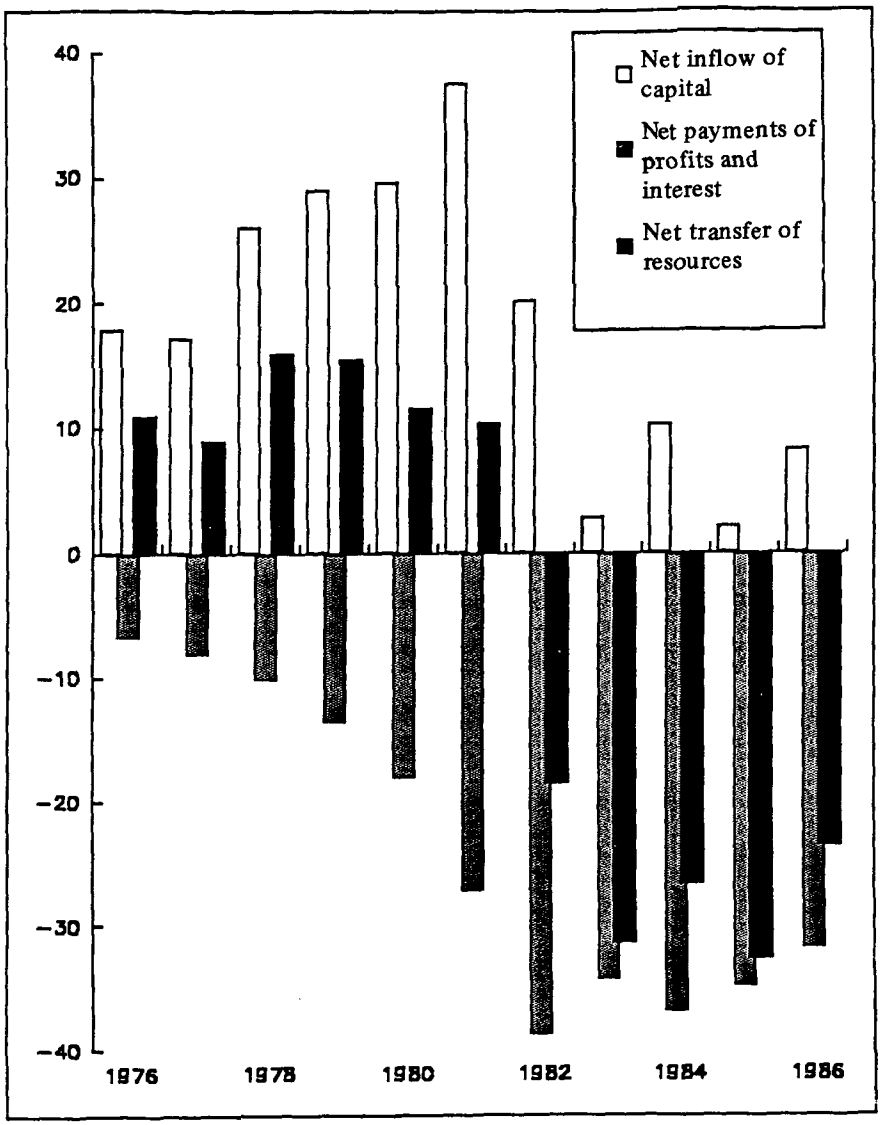

Source: ECLAC, *Preliminary Overview of the Latin American Economy*, Santiago, Chile, December 1986.

raw materials, but it has also accentuated the countries' economic and social disarticulation (increased unemployment, regressive income distribution, elimination of subsidies to less privileged sectors, increase in utility rates and decline of real wages) and limited their potential for growth.

From 1980 to the present, the Latin American countries have suffered losses, both in terms of economic and social articulation and of dynamism. More and more countries are showing symptoms of both stagnation and economic and social disarticulation; very few of them could be classified as dynamic countries with economic and social disarticulation, and very few could be classified as relatively articulated but stagnant countries. None of them could be said to meet the two-fold standard which at some time in their history has been met by most of the advanced societies, i.e., to be economically and socially articulated as well as dynamic. Expectations have become very similar throughout society, as a result of the high degree of urbanization in the different countries of the region and of the wide dissemination achieved by the mass communications media; not everyone, however, has the same access to the consumer, production and mass communication goods and services that are characteristic of modern societies.

The adoption and dissemination of this collective urban ideal in Latin America may help explain why these countries are willing to pay the interest on their foreign debt, as this is perceived as the dues they must pay in order not to lose their membership in the conglomerate of modern societies (figure III). Indeed, despite the great diversity of national situations as regards the origin and use of the debt, institutional patterns, negotiations, economic role, participation on the international market and even political systems, the countries of the region all showed a willingness to transfer a net amount of resources abroad during the period 1982-1988. Thus, there is no precedent of a total refusal to pay debts, except in the distant past, when the countries concerned had suffered military defeat (France in 1872-1885 and Germany in 1925-1932) (Devlin, 1987). Whether or not this theory is correct, the fact is that the Latin American region is faced with serious constraints which hamper its efforts to attain the two-fold objective of growth plus economic and social articulation. Unless it succeeds in achieving this goal, it will be unable to consolidate modern social relations, even if it has access to the use of modern objects.

III. ANALYTICAL FRAMEWORK: FROM THE BLAK BOX TO THE EMPTY BOX

1. Purposes and scope

In an attempt to identify the main factors which play a part in linking industrialization and development patterns with growth and equity, we drew up some hypotheses on the causal relationships which might explain why the objectives of growth and equity have been achieved in some countries but not in the Latin American ones. An understanding of the factors at work in both cases is essential to the establishment of practical policies that can truly help raise living standards and correct inequities.

The purpose of this analytical framework is to enable us to organize our ideas systematically in order to allow us to better understand the linkages that have developed in existing industrial systems. This will not necessarily explain the evolution of a given country at a given time, but it will provide some useful indication, by way of contrast, of the type of causal relationships that have promoted the convergence of growth with equity in each case when this has occurred.

Any attempt at understanding and describing the factors that have favoured such development entails the risk not only of idealizing past experiences by minimizing the negative aspects they must have had, but also of creating the impression that certain factors must be present in order to achieve the desired goal. In the developing countries, conditions which seem to be lacking are likely to be replaced by others, and many conditions which in the developed countries would be considered prerequisites may actually be the result of the very process of industrialization.

In the developing countries, much of what is considered "preparation" happens to coincide with the stage of industrial progress, and it may even be said that this combination of stages is the real condition for rapid industrialization. Some situations in specific periods and countries may not fit into this pattern, but precisely because of this, they may bring to light other factors that would have to be added to the framework in order to advance towards the policy-making stage. To the extent that the

framework is proven valid by the facts, this phase should include changes and policy tools which can have an impact in the economic, social and political spheres, so as to modify behaviour and lead to changes in the right direction. As in any comparative analysis, there is perhaps a tendency to disregard certain national characteristics in order to emphasize, by way of contrast, those features which are most likely to provide explanations.

Our reasoning is carried out in two stages: firstly, we suggest the causal relationships on which our interpretation is based and, secondly, we briefly mention those policies which may promote or hinder the attainment of the twofold objective of growth and equity as a result of development.

2. Framework for interpretation

The elements and causal relationships on which our discussion is based are shown in Figure IV. Our interpretation is carried out in two stages: firstly, attention is centered on those factors which are at the heart of our analysis, i.e., transformation of the agrarian structure, equity, consumption pattern, investment, growth and competitiveness of the industrial system; secondly, an analysis is made of how this nucleus is influenced by factors such as the availability of natural resources, population trends, the availability of national industrial entrepreneurs, the supply of scientific and technological know-how, direct foreign investment, international financial transactions and the international consumption model.

a) *Transformation of the agrarian structure and income distribution*

Our analysis begins with the transformation of the agrarian structure; this may seem strange, since we are mainly concerned with the industrial sector, the adoption of technical progress and participation in the international market, but experience has shown that the structural transformation of the agricultural sector has often played a decisive role in the industrialization process (Gerschenkron, 1965). This transformation has followed many different patterns, as have the social processes within which it has taken place, but in every case, it has been decisive in helping "campesinos" integrate into modern society, changing the relations between agriculture and industry and, specifically, improving the situation with regard to equity. The structural transformation of agriculture has had a significant effect on patterns of income distribution —and, hence, on patterns of demand— with which different societies have begun the actual development of their industrial structures.

The origins of inequity and, in fact, of some of the behavioural patterns of the ruling élites —which determine the direction of development and industrialization— are closely related to the way in which

Figure IV

FRAMEWORK OF INTERPRETATION

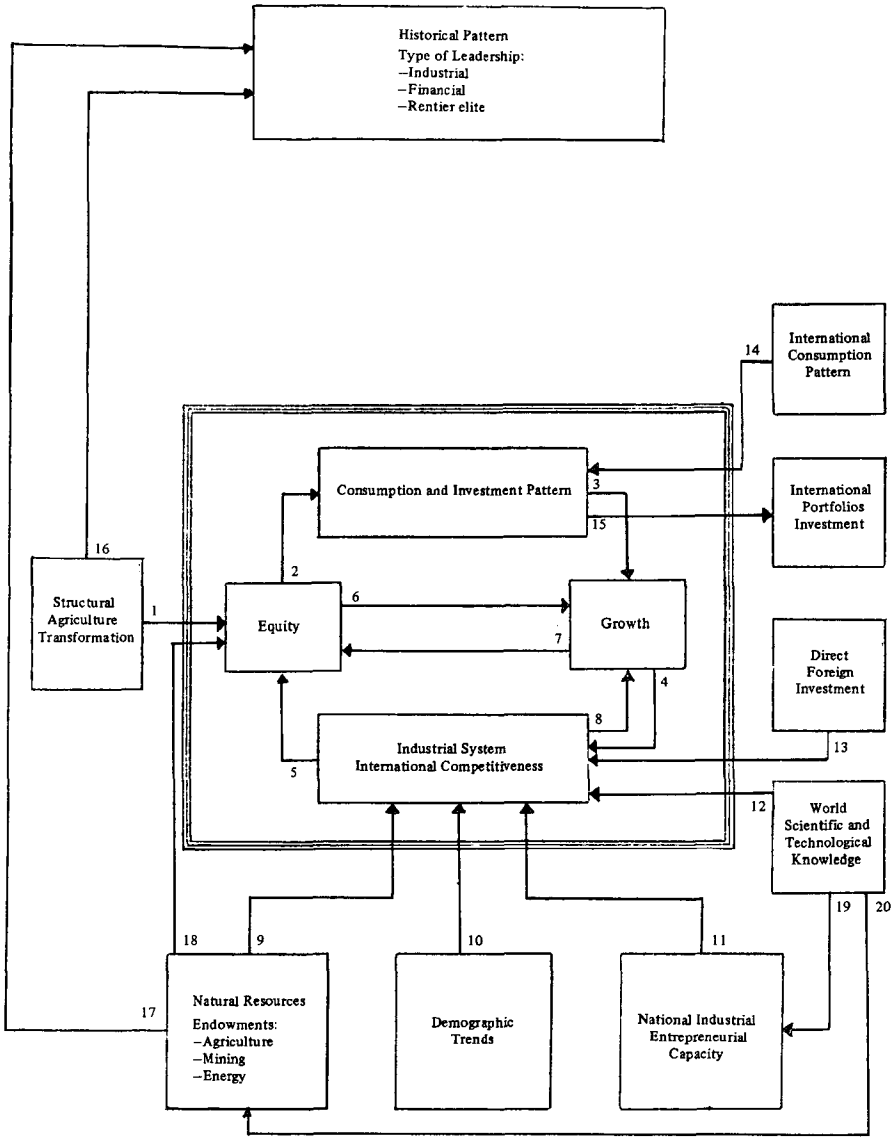

agrarian structures have been formed and transformed. One feature which distinguishes Latin America from the developed countries and from some newly industrialized countries in other regions is the pathology of this inequity. Even those countries which have the best profiles in the region —Argentina and Uruguay— and a relatively more modern agrarian structure (fewer differences in productivity both within the agricultural sector and between agriculture and industry) have patterns of income distribution which are comparable to those of the developed countries during the 1940s (figures V, VI and VII). The other countries of the region, in which there are great disparities in productivity between sectors and within the agriculture sector, have income distribution patterns which do not appear to be comparable with any in the developed countries, at least during the period in history for which reliable data are available. Eighty-nine per cent of Latin America's economic activity (GDP) takes place in countries with a level of equity that is less than half that of the developed countries. It appears from several international studies, as well as the experience of Latin America, that there is a clear causal relationship between the structural transformation of agriculture and improved income distribution; as we shall see later on, income distribution plays an important role in the shaping of the production system and hence in a country's capacity to absorb and generate technical progress and to enter the international market (Hayami and Ruttan, 1985; Lecaillon *et al.*, 1984).

In the developed countries, the birth of industrialization was preceded and accompanied by far-reaching transformations in the agrarian structure which made it possible to disseminate and standardize increases in productivity (the Puritan revolution in England, the French revolution, the Meiji restoration in Japan, the American Civil War, the agrarian reform in Korea and Japan) (Mizoguchi, 1985). This helped expand markets, both in agriculture and in industry.

Those forms of social organization of agricultural production which preceded the process of industrial organization seem to have been especially important, in that the presence or absence of unimodal agrarian structures influenced the internalization of the dynamizing impact of demand for agricultural inputs and consumer goods in a newly arising industry.

Moreover, the large-scale production of consumer goods and of simple means of production during the early stages of industrialization depended on the uniformity, as regards type and size, of agricultural production units. This allowed for the gradual assimilation, adjustment and generalization of technology patterns that were well suited to the scales and forms of organization of production units having a normal distribution (in which differences in means, median scale and mode were not significant).

Figure V

SELECTED COUNTRIES: INCOME DISTRIBUTION, 1900-1980

(Upper 20% income)

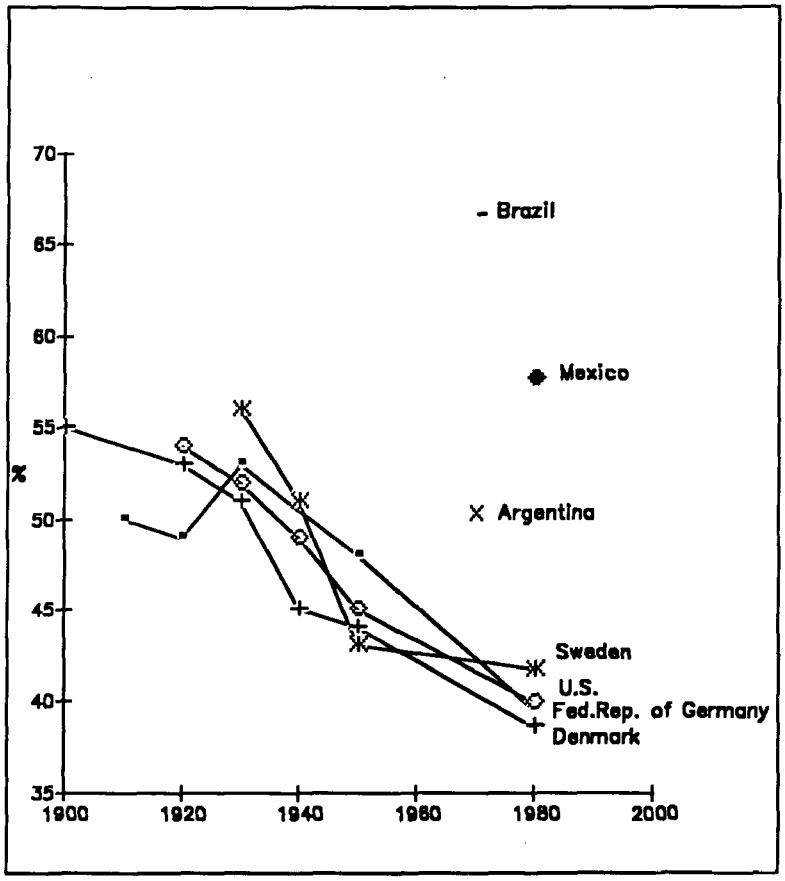

Source: Joint ECLAC/UNIDO Industry and Technology Division, based on Simon Kuznets, Modern Economic Growth: Rate, Structure and Spread, New Haven, Yale University Press, 1966 and World Bank, World Development Report, 1986, Washington, D.C., July 1986.

b) ***Income distribution and consumption and investment patterns***

When average incomes are the same, equity tends to lead to a more austere pattern of consumption than when there is an acute concentration of income, inasmuch as it inhibits the tendency of the higher-income sectors to copy and exaggerate the consumption pattern of the more

advanced societies. Likewise, since a more frugal pattern of consumption leaves resources free for investment, it might be assumed (as suggested by José Casar and Jaime Ros, although this hypothesis is difficult to prove in practice) that there is a certain relationship between affluent consumption and the capital-product ratio. The productivity of investment would appear to be higher in societies in which the consumption pattern is relatively more austere, i.e., in which durable goods, energy and foreign

Figure VI

SELECTED COUNTRIES: INCOME DISTRIBUTION, 1900-1980

(Lower 60% income)

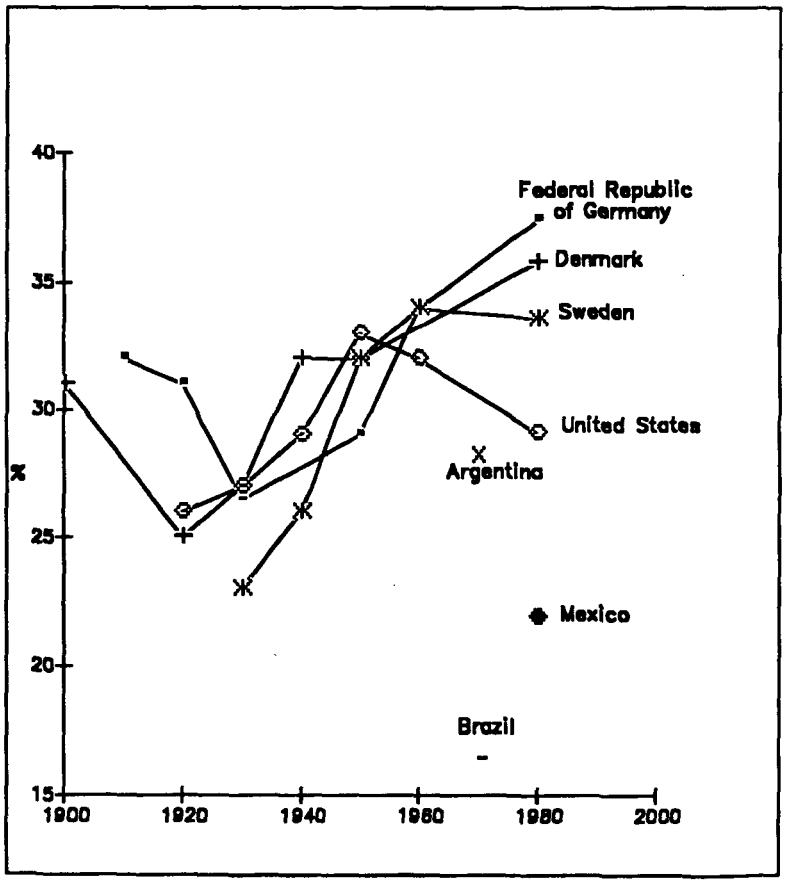

Source: Joint ECLAC/UNIDO Industry and Technology Division, based on Simon Kuznets, Modern Economic Growth: Rate, Structure and Spread, New Haven, Yale University Press, 1966 and World Bank, World Development Report, 1986, Washington, D.C., July 1986.

Figure VII

SELECTED COUNTRIES: INCOME DISTRIBUTION, 1900-1980

(Lower 60% / upper 20% income)

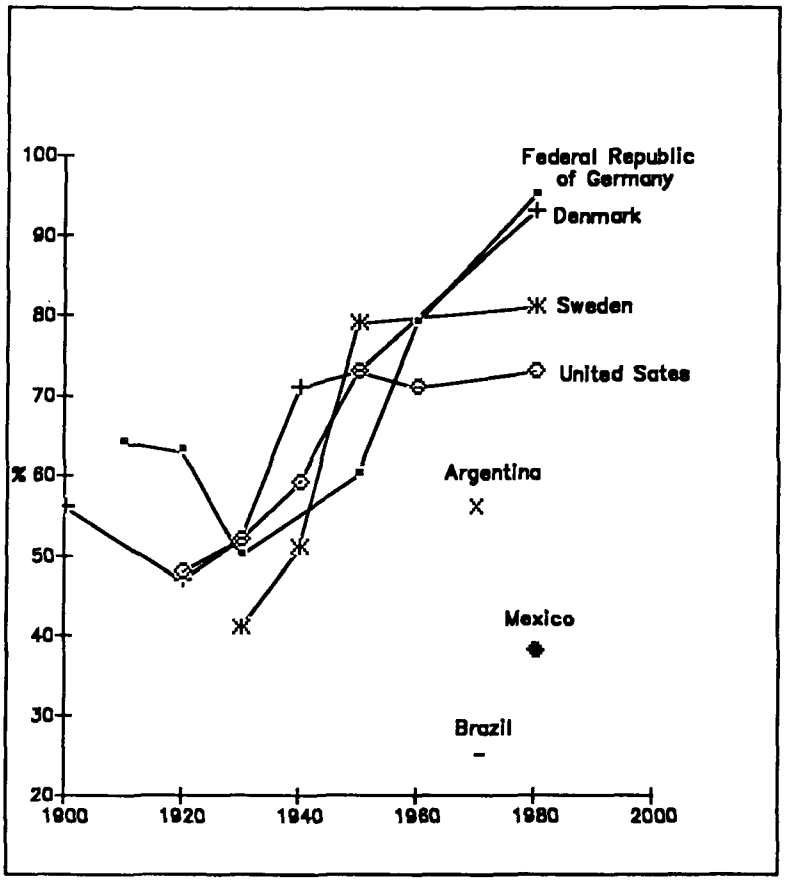

Source: Joint ECLAC/UNIDO Industry and Technology Division, based on Simon Kuznets, Modern Economic Growth: Rate, Structure and Spread, New Haven, Yale University Press, 1966 and World Bank, World Development Report, 1986, Washington, D.C., July 1986.

exchange are not so abundant. In those countries, the capital-product ratio would seem to be lower than in those which try to reproduce a foreign consumption pattern that is characterized by an abundance of durable consumer goods and energy, as well as the physical communications and transport infrastructure to support it, and which is conceived for countries with a low population density, abundant capital and very large land areas.

Income distribution is influenced by a wide range of factors, including structural ones and others pertaining to public policy. Figure IV, above, shows the transformation of the agrarian structure, the competitiveness of the industrial sector and the growth rate. If there is enough political will, public policies on distribution and redistribution can have a significant effect. These include fiscal policy from the standpoint of income, expenditure and budget balancing, income policy, policy on employment in urban, poor and rural areas, policies aimed at promoting social organization (trade unions, parties, co-operatives, associations), health and educational services, training programmes, the establishment of low-income housing developments, the social welfare system, and support for small industries, both urban and rural. Nevertheless, the differences in equity between developed countries (e.g., the United States and Japan) and developing countries (Korea and Latin America) can hardly be explained as being due to ignorance of the aforementioned instruments on the part of public officials.

In some countries, the influence exercised by the independently wealthy élite acts, to a certain extent, against equity, both directly, because of the concentration of land ownership, and indirectly, because of the existence of institutions and economic policies which tend to consolidate a system wherein the benefits of progress are distributed in a manner consistent with the original distribution of power. A radical opening up of the domestic market might raise questions about or rationalize the industrial system dominated by the *rentier* élite, but if the original distribution of power is not changed, and power is concentrated, the resulting regression of industry will lead to an accentuation of the pattern of participation in the international market on the basis of natural resources and the development of commercial and financial intermediation.

c) *Consumption and investment patterns and growth*

A comparison of different historical development experiences leads to a preliminary conclusion which is different from the one usually accepted: it would appear that equitable income distribution and greater austerity in consumption patterns foster growth. The institutional mechanisms that are best suited for channeling savings towards investment differ in different cases. In the countries that industrialized first (England), where a large number of small- and medium-scale investors accumulated capital, the Weberian hypothesis of asceticism is clearly confirmed. Nevertheless, in the countries which developed later, the process involved different types of institutions and more important agents emerged, with a different capability for channeling and generating investment resources, including external and internal credit. In the

countries that developed later, these agents seem to have replaced fragmentary initial accumulation by chattel mortgage banks (as in France); subsequently, by mixed banks such as those set up in Germany and, finally and more recently, and depending on a certain type of substitution related to the degree of backwardness, by the State (Gerschenkron, 1965).

In Latin America, the State plays an important role in channeling resources towards investment. How does it do this, what distortions are involved, what are the underlying social coalitions, what degree of stability is there?

In addition to the institutional dimension, there will be the influences exerted by the different economic policy instruments that affect the channeling of savings towards investment, as well as the external linkages that lead to the reproduction of international consumption patterns and the creation of external transfer flow of savings, both through financial deposits and through payments for interest and profits. What is important to note is the linkage between the degree of austerity in consumption, the role of investment agents and the dynamism and the trend —which has been growing over the past decade— towards a confluence of national and international processes whereby savings are turned into investment (during the 1980s, Japan, Federal Republic of Germany and, paradoxically, Latin America, have been saving more than they invest, and the United States has been investing more than it saves).

Income distribution has a significant effect on consumption, but so do several economic policy instruments; tax and social security systems, credit policy and capital costs also determine differences in consumption and investment patterns.

The mentality fostered by the presence of the *rentier* élite among public officials tends to affect consumption and investment patterns. The *rentier* élite want to propagate the lifestyle of the developed countries and they manage to do so, regardless of the private and social costs involved, not only through their own direct consumption, but also through the dissemination of values and physical investment options that are consistent with the hypothetical access to this lifestyle of the rest of society. Thus, this reference pattern spreads towards the base of the income pyramid, reaching the lower strata more and more, depending on the unit value of the goods and services involved. As soon as the potential for growth through the integration of rural manpower or of capital resources from abroad is exhausted, this process can undermine the potential for growth.

The consumption patterns of the developed countries can still be reproduced without jeopardizing economic growth as long as labour from the rural areas is available and there are foreign exchange resources generated both by exports of natural resources and by foreign indebtedness. But once the option of foreign indebtedness no longer exists and the

social consensus becomes increasingly costly and politically fragile, with large sectors of the population being excluded —which is usually the case when this type of leadership prevails— the growth process will be questioned. This seems to be, in general terms, the situation that some Latin American countries were beginning to experience, and which was expressed in different ways at the beginning of the 1970s. This situation continued up to the end of the 1970s because external indebtedness was readily available, but in the last few years, the net transfer of resources abroad represented 4% of GDP and there is no indication that the previous situation —where there was a net inflow of resources— will be restored, at least over the next few years.

d) ***Economic growth and international competitiveness***

Economic growth allows for the adoption of new generations of equipment and products, thus helping to raise productivity and improve international competitiveness. Initially, the domestic market expands, in order to receive a growing range of goods and services associated with economic growth, which is enhanced when there is equity and austerity, and an invaluable base is provided for learning in the areas of industry and technology, which is a prerequisite for further participation in international trade. This mutual reinforcement of economic growth and competitiveness, in which the requirements of equity, austerity and technological learning are often forgotten, is one of the pivots of a successful industrialization process. In Latin America, because of deficiencies in the areas of equity and austerity, and because of the frivolousness of protectionist practices, growth and competitiveness have been sporadic, and this is not consistent with the cyclical nature of growth in industrialized societies. In this case, there are variations within a growing tendency to adopt technical progress, whereas in Latin America, the consequences of the weakness of some of the links required to sustain the process become apparent from time to time.

Growth is one of the main objectives of development, and a variety of factors are involved in attaining that objective. In this case, we are stressing consumption and investment patterns, equity levels, industrial competitiveness and the policies and guidelines established by those who exercise leadership (macroeconomic policies, public sector financing, institutional savings mechanisms, financial intermediation systems, financial flows from and to the exterior). It is evident, however, as regards both growth and equity, that certain specific features of a country's development history have a great impact. For example, in those countries where there is a *rentier* élite, this group does not seem to be concerned about growth or projects aimed at building for the future; rather, they are mainly interested in maintaining the *status quo,* which

especially benefits them. This is reflected not only in prevailing values or attitudes, but also in specific signs and economic policies which tend to discourage true economic and social change. In more general terms, any reflection on the true situation, with its shortcomings and potentialities, will almost by definition seem subversive to this group, since questions are raised about the continuation of a state of affairs which, although anachronistic, is particularly pleasing and comfortable for this élite. This does not preclude certain inevitable economic and social changes, which will be absorbed as long as the essential matter of the existence of this élite is not questioned, nor does it mean that certain plans and proposals for change cannot be put forth. Sometimes, however, they try to give an appearance of legitimacy, outside the country, to internal governmental action, in order to gain political and financial support.

e) *Competitiveness and equity*

An internationally competitive industrial system in a social context in which a minimum of equity has been attained (agrarian transformation) could promote equity by allowing for a relatively broader distribution of ownership, along with the creation of small and medium-scale enterprises; a higher level of worker skills; more rapid growth of employment, in keeping with the vitality of the international market; higher productivity and wages; universal access to education, with a broader and more integrated social base, which is a prerequisite for maintaining international competitiveness; and, finally, the dissemination of an industrial rationale throughout the society, through both institutional and extrainstitutional channels, which will make it more receptive to technical progress. This will in turn help improve productivity, and hence foster a more equitable dissemination of the fruits of technical progress to overall society. However, this will not be achieved if competitiveness is reached at the expense of wages, and if resources generated during the initial stage, instead of being channeled towards the incorporation of technical progress through investment, are displaced towards consumption or towards the exterior. Competitiveness that is achieved in this way will be spurious and short-lived, and must not be confused, either theoretically or historically, with the competitiveness described previously in this study.

International competitiveness is influenced by rate of growth, availability of natural resources, the existence of a national entrepreneurial base, access to worldwide technology, the nature of foreign investment, and policy instruments as a whole, i.e., overall demand, exchange policy, interest rates, tariff policies, export promotion, credit policies, institutional mechanisms for financing medium-term investment, technological, training and external trade infrastructure, etc. However, the different

policies applied have probably had less influence on the international market activity of the European countries, the United States and Japan than the structural factors mentioned above.

In the case of Latin America, for example, leadership with a bias towards the *rentier* élite may have had something to do with the unique way in which the industrial system was shaped. The fact that industrialization has concentrated on the domestic market and has generated a sort of rent for the industrial sector may be a reflection of the *rentier* attitudes of the traditional sectors which have spread to the newly arising industrial sector. Indeed, when industrialization takes several decades, and almost a century in some countries, and concentrates on the domestic market, it gradually becomes a source for transferring rent from the consumer to the productive industrial sector. As a result, *rentier* behaviour becomes generalized within the private industrial sector and in the public bureaucracy that regulates and administrates concessions to the production sector, which is assumed to be the protagonist of modernization. To this must be added the fact that in most countries of the region, this *rentier*-based industrialization coexists with a traditional agrarian structure; this inhibits the development of dynamic relations between the two. As noted by Faletto (1981), the industrial revolution created its own demand, or market, by transforming the social structure. The Latin American bureaucracy which tried to solve the crisis of 1930 adjusted the economy to the society, and did not bring about any major change in the society that would prepare it for a new economy.

f) *Equity and growth*

When a society reaches a higher degree of equity, it is more likely to undertake long-term projects that will promote growth. The sense of belonging to a society and being a part of the community encourages people of all social strata to be more willing to participate in the collective effort which entails partly giving up consumption for the sake of economic growth. Equity promotes growth directly by creating a consumption pattern that is compatible with a higher and more efficient rate of investment, and indirectly, by generating a social climate that is conducive to building for the future. This makes it necessary to legitimate the élite and the system, in order to encourage society as a whole to undertake action and take decisions that will help achieve this objective. This position is not in keeping with the general view that the redistribution of income jeopardizes economic growth over the short term.

Economic growth, for its part, furthers social peace, and makes any potential lags in distribution more bearable than they would be if stagnation prevailed. This is not to say that growth, in and of itself, leads to equity —this has always been proven false in Latin America and in other regions— but that, where growth does take place and industry is compet-

itive, a lag in equity does not necessarily lead to social conflict, as long as the people trust that the future will be better than the present. In brief, equity supports growth and growth supports equity as long as a competitive industrial system coexists with more austere and productive consumption and investment patterns.

g) *Competitiveness and growth*

The competitiveness of an industrial sector with a more dynamic demand than the other sectors of production makes a positive contribution to growth. Experience has shown that international trade in manufactures grows at a higher rate than world trade, and this difference is greater for those items which have a higher content of technological innovation. Over the last 40 years, such innovations have originated in metal products and engineering and in chemicals. Breaking down the statistics further, we note that those products which are in the lead in international trade and technical progress are changing and consequently, the capacity of a country to enter the international market on a sound foundation will depend to a large extent on its ability to follow the international trends in technology.

As this ability is developed, the feedback effect on growth is accentuated, as a result of changes in relative prices, increases in productivity and the expansion of the domestic market. In saying that competitiveness reinforces growth, we must add that this is all the more true when the items with respect to which there has been an increase in productivity have a high technological content and when the country concerned already has an infrastructure of enterprises and technology to support this growth. This is not to ignore the possible contribution of low-technology items or those which originate in foreign enterprises, but rather, what we wish to stress is the importance of the relationship between sectors of production, enterprises and types of market, a matter which will have to be studied further in order to improve knowledge about the process of technological innovation. Because traditional macroeconomics does not take into account this link (sectors, enterprises, markets), it is less able to grasp the true meaning of the dynamics of technical progress.

h) *Natural resources base and competitiveness of the industrial system*

The influence of the natural resource base on the shaping of a country's industrial system must not be underestimated, especially as regards the pressure to attain international competitiveness. In those countries which have an abundance of natural resources, the legitimacy of the system —which involves the ability to increasingly meet the main needs of society— may last longer thanks to the advantages offered by the

resource base. In countries which do not have such a base, however, in order to claim legitimacy, a system must generate, through the establishment of an internationally competitive industrial sector, the foreign exchange required to meet the growing needs of the population. This strategy will be all the more pressing the smaller the base of resources and the greater the country's determination to penetrate, through its national companies, the markets of developed countries and those sectors that have a high and growing content of technology. Such a strategy is the only option for countries which, because of their shortage of natural resources, have decided to sustain a development pattern which will ensure, at the same time, both growth and equity. More than an alternative among others, what we have here is a strategy for the very survival of industrial society.

The application of scientific and technological know-how to prospecting, extraction and industrialization has been more intense in countries which have had both a shortage of natural resources and an advanced scientific and technological infrastructure. This is the case with regard to renewable as well as non-renewable resources and with regard to the systematic effort to develop substitutes for natural resources that are scarce and strategically important. Genetic engineering, the development of composite materials and the use of information technologies in prospecting for resources has become especially important over the last 10 years in the industrialized countries which seek to become more and more self-sufficient so as to have a supply of materials and products that meet precise and stable specifications.

Increasing knowledge about elementary particles and the development of improved electronic instruments and equipment are furthering a transition to a period in which materials science will play an important role. To the above factors must be added the economic considerations arising from the rising costs of energy and the intensification of international competition, which are leading firms and governments of the industrialized countries to improve their efficiency in the use of natural resources.

That is why all the developing countries sense the need to conceive and apply comprehensive policies on renewable and non-renewable natural resources with a feeling of urgency that would have been unthinkable a decade ago. In dealing with this task, they must overcome or offset some of the obstacles mentioned above by means of a structural transformation of agriculture, the development of scientific and technological infrastructure, improving the competitiveness of the industrial sector, establishing mechanisms for financing long-term investment and overcoming the *rentier* mentality that was based on the abundance of natural resources.

i) *Population growth and the industrial system*

Although there is no question that population dynamics influence, to a greater or lesser degree, the evolution of the industrial system, it is difficult to generalize about the direction in which this occurs. Greater population growth —when there is a good supply of natural resources— can enable the industrial sector to continue growing for extended periods, even if it concentrates on serving the domestic market. In other cases, a high rate of population growth could lead to hyperurbanization, with the resulting investment in physical infrastructure and an increase in the capital-product ratio which, along with the absorption of a large part of the population growth in activities that are not very productive, will exacerbate inequity, thus jeopardizing long-term growth.

This ambiguity may be seen in the fact that the only combination which does not occur in Latin America is the combination of low population growth with high economic growth. In the absence of population growth, the stage of growth with a low rate of increase in productivity may end sooner, but when the population grows rapidly without there being an adequate accumulation or market, there will inevitably be a loss of dynamism.

It is difficult to discuss this issue in theory, as it still has not been properly defined, and it is politically sensitive and even extremely controversial in some countries. The general trend, however, at this stage when expectations are harder and harder to meet, is to consider policies aimed at promoting, by different means, different types of birth-control policies. Except for the United States, where the population is still growing at a relatively high rate, this problem does not arise in the other industrialized countries, where population has been reduced to a minimum; in the developing countries, especially the Latin American ones, population growth rates have been falling, along with the strengthening of institutions and policies which are directed toward this goal.

j) *National entrepreneurs and the industrial system*

The availability of a national entrepreneurial capability will undoubtedly be a decisive factor in determining whether an industrial system can be built up that will be able to compete on the international market. This is not necessary when only the domestic market is concerned, in which case leadership of the more dynamic sectors can be left in the hands of the transnational corporations, which are able to adjust easily to conditions on that market.

On the other hand, in penetrating international markets, technical innovation is required in order to stand firm by the only means that will not be closed, i.e., through intellectual value added to natural resources or

unskilled labour. It will therefore be essential to have a national entrepreneurial capability, including a variety of ways and means for linking up with foreign investment.

Transnational corporations can help promote exports in certain periods and sectors in countries which have a large domestic market or in countries where wages are low. The soundness of a country's position on the international market, however, is usually determined by the level of skills of the population and its ability to take part in an ongoing process of technological innovation. To be more specific, it depends on the existence and development of national firms that will be able to compete, either on their own or in association with foreign investment, with the firms that are already supplying the international markets.

The issue of entrepreneurial capability is related to the question of the existence of a technically qualified labour sector and the related trade unions. Relations within each enterprise and in the different branches of industry, in addition to affecting social and political institutions, have a decisive influence on the evolution of productivity and the absorption of technical progress.

The main protagonist in the process of adoption of technical progress is the private and public entrepreneurial agent, without whom policies and institutions working on scientific and technological research become mere motors working mechanically. The development of these agents is influenced by the history of the individual country and the changing national and international environments.

The increasing importance of financial intermediation in production activities, which has grown over the last 10 years, undermines the creativity and growth potential of production companies, even in countries which used to be leaders in industry (England at the end of the nineteenth century and the United States during the 1970s and 1980s).

In Latin America, the *rentier* élite tend to discourage, both directly and indirectly, the emergence of innovative industrial entrepreneurs in leadership roles. On the other hand, in societies in which industrial leadership is associated with a total lack of natural resources, that leadership can only be legitimated through the strengthening and dissemination of an enterprising spirit on the part of national industrial entrepreneurs. For the *rentier* élite, the indiscriminate presence of affiliates of foreign corporations is perfectly acceptable; moreover, this may even help them consolidate their position on the domestic scene. Local *rentier* leadership does not see any need for strengthening a national industrial base, which is a prerequisite for undertaking a sustained process of adoption of technology and, consequently, for effective penetration of international markets; rather, it leans toward the development of national enterprises and groups in sectors which produce non-tradeable goods and services, such as construction, where they have the

captive market of national public investment. That is why, in most of the Latin American countries, the main modern national entrepreneurial groups have their centre of gravity in that sector. This is also true in the case of financial and commercial intermediation, where traditional sectors are also to be found along with newly emerging entrepreneurial sectors.

Although it takes some time for them to bear fruit, public policies aimed at promoting private and public entrepreneurial development can play an important role, especially in regard to the improvement of efficiency in public enterprises and the promotion of small and medium-scale companies. This is becoming more and more important during this time of transition towards a pattern of technology which is characterized by smaller minimum scale plants, greater flexibility and, in general terms, a greater technical capability for decentralization.

k) ***Access to scientific and technological know-how, and the industrial system***

The prospect of gaining access to the worldwide store of technological know-how is a factor which promotes the consolidation of internationally competitive industrial systems. Such access makes it possible to strengthen the national entrepreneurial base and this, in turn, is a prerequisite for the absorption of technology. The meager accomplishments of institutions devoted to the development of science and technology in Latin America —institutions that arose in several countries of the region during the 1970s, with similar characteristics, but limited resources— may be attributed, in part, to the internal economic situation, but also to the limitations of the economic agents who were responsible for absorbing, applying and requesting this type of know-how, i.e., the weakness of the national industrial entrepreneurial base, both public and private. No one knows, as yet, how much frivolous protectionist policies had to do with the weakness of the entrepreneurs. In addition, the store of technology and scientific knowledge influence both the real supply of natural resources (prospecting and exploitation techniques) and the demand for them.

l) ***Foreign investment and the industrial system***

The presence of international corporations which invest directly in the industrial sector is a factor which, depending on the circumstances, can strengthen or weaken national entrepreneurial capabilities, but which does not determine, in and of itself, the competitiveness of the industrial system. In countries in which the industrial system is geared mainly towards the domestic market, this direct foreign investment will tend to follow a pattern similar to that of the national sector. That is why

in Latin America, the export coefficient of foreign corporations is no different from that of the national firms, whereas in other countries with a strong international participation, that coefficient is higher than that of the national firms. In some countries, foreign corporations are allowed, provided their export coefficient is much higher than that of national firms; in other words, they are granted access to the domestic market in return for the access to the international market that they can provide (table 6).

Except in special cases in which geographical location or the availability of cheap labour make a country attractive as a platform for exports, what the foreign corporations seek is to open up new markets; hence, what they are mainly interested in is supplying the domestic market. It is therefore utopian to expect that the mere incorporation of foreign investment will solve the problem of the international competitiveness of the industrial system.

In the industrial sector, the issue arose during the 1950s and the 1960s, with the international expansion of United States corporations; to these were added the European firms, during the 1960s and 1970s, and, during the 1970s and 1980s, the Japanese ones. Investment flows have mainly moved among developed countries, as have trade flows, but during the 1960s and 1970s, the growth of direct investment in Latin America, especially in the larger and more dynamic countries (Brazil and Mexico), reached significant levels, consistent with the dynamism of the region during that period. The question of foreign investment policies came to the fore in international discussions. During the 1980s, the flow of direct investment towards the region, which has been decidedly pro-cyclical, fell, with the emphasis being on flows between developed countries and towards the United States, the country towards which investments from Japan, Europe and even United States firms returning to the country, converged. The matter of foreign investment in the United States was sometimes comparable to the discussions in Latin America during the 1960s and 1970s, i.e., questions were raised as to the possible erosion of sovereignty and self-determination which such investment implied. Curiously enough, at the present time, Latin American policies favour foreign investment, but they have not brought much fruit, since the market which those companies are seeking now is the one in which their ability to grow and survive is determined, i.e., the market of the developed countries themselves.

m) *A single pattern of universal consumption*

During the 1970s, thanks to the advances made in communications and the increasing ease of movement of persons and ideas, the consumption pattern prevailing at the world level became very

transparent; this is a factor which must be considered when examining the consumption patterns of individual countries. It would be unrealistic to ignore this model, which has become a collective ideal, even in the rural areas. Recognition of this situation does not mean abdicating the responsibility of reconciling the rate of adoption of this modern lifestyle, expressed in goods and services, with the domestic requirements of growth and economic and social integration. The differences between countries do not lie so much in the fact that some choose one consumption pattern or others choose a different one (there does not really seem to be any other), but rather in the rate and the ways in which this single and predominant reference pattern is adopted at a given time in a given society.

In Latin America, this universal consumption pattern seems to have been propagated without the least regard for meeting the requirements of economic and social integration within each country or creating conditions for sound international participation, while average income levels were much lower than they had been in the societies where these models originated, at the time of their adoption. The universality of this consumption pattern may be seen even in the increasing penetration of certain goods and services, of purely symbolic importance, in the centrally planned-economies. In those countries, there is a willingness to pay royalties with the export of local products or with hard currency, in order to enable the population to have certain goods which could hardly be justified on objective grounds. Rather, this is an acknowledgment of the fact that, among the collective ideals of those countries, this universal consumption pattern, which basically originated in the United States, has been adopted so widely that it cannot be ignored at the political level.

There is no question that public policies are needed to regulate the adoption of modern consumption patterns if there is a real desire to foster economic and social articulation within a country and enhance the competitiveness of the national industrial system. Different instruments will be needed in different cases, but it seems that the most effective will be tariffs, consumer finance regulations, tax measures and some extra-economic measure that has to do with social awareness of the need to reconcile access to a modern lifestyle —a permanent and legitimate motive— with growth and equity. The mass media will play an extremely important role in this effort, either in working towards this goal or in hindering it. In the last analysis, it is a matter of ensuring compatibility between the pursuance of modern interpersonal relations and the legitimate use of modern goods and services.

n) ***Flow of financial resources to the exterior***

To the universal consumption pattern has been added, since the late 1970s and during the current decade, in both the northern and the

southern hemispheres, the existence of expeditious systems for sending financial resources abroad, which are difficult to control and regulate. Agents who have financial resources in any one of these countries have the option of placing them, quickly and safely, in hard currency and at good interest rates. This means that the ability to generate domestic resources for investment does not necessarily guarantee that they will stay in the country.

The steps taken by the developed countries to liberalize the financial markets of the developing countries have had the practical effect of bringing the investment processes of the developing countries to the point where they must not only face the problem of defining options for depositing resources within the country and generating their own resources, but also with the option of making deposits in hard currency abroad, by expeditious means, thanks to the progress that has been made in communications and computers. Differences between countries may be explained to a large extent by the domestic economic policies followed by each country. Computerized data processing has undoubtedly had a great impact on the absorption of liquid financial resources, although, of course, this is not the reason for the exodus of capital, but rather the technical means which facilitates it.

The ease with which financial resources can now be moved raises questions about the autonomy of governments in designing their economic policies. This refers both to the industrialized countries and to the rest of the world. One difference, however, lies in the fact that in the non-industrialized countries, especially in Latin America, financial flows are systematically on the negative side. This is an obstacle which works against the very essence of the growth and the restructuring of production in those countries, even without taking into account the foreign debt problem. Unless the international financial system is reorganized, as the national financial system was during the crisis of the 1930s, and unless national financial systems are adjusted to deal with this situation, it is difficult to imagine how a national policy could effectively counteract the transformation of domestic savings into foreign investment, usually of a financial type.

o) *Transformation of the agrarian structure and type of leadership*

Agricultural specialists, basing their arguments on economic history, hold that the structural transformation of agriculture has a great influence on the modification of leadership and hence on the evolution of social formations. In Latin America, they say, the inadequate structural transformation of agriculture is reflected not only in the uneven distribution of income, but also in a certain component of *rentier* attitudes among the national élites. Moreover, the development of a citizenry of free

people having rights and duties *vis à vis* the State, seems to have a great deal to do with the type of leadership that is exercised and with equity, in that it favours the organization of claims in this regard. It implies the transition from personal dependency (servitude) to full citizenship. In situations in which political change does not transform the agrarian social structure, there is a *gatopardo*-style domination mechanism, whereby the traditional sectors develop flexibility to absorb and deform the modernization processes.

According to Schejtman (1985), when one considers the results of the more recent studies based on historical experience, it is difficult to disregard the fact that it is greatly to a country's advantage to enter the modern stage of agricultural development with a unimodal agrarian structure, consisting of small-scale farms, in which producer-owners prevail. Even in the best of cases, the political cost of improving the land ownership system is very high. When agriculture is restricted to a bimodal model, as in the traditional *hacienda-minifundio* system which was characteristic of much of Latin American agriculture, the political costs are so prohibitive that only minor adjustments can be made in order to establish a more efficient agrarian organization.

The Latin American production structure which specialists call bimodal is characterized by a small entrepreneurial sector (between 20 and 25% of production units) which concentrates most of the cultivated lands, and an even higher proportion of lands under irrigation, generating around three-fifths of commercial production, and a vast peasant sector at the other end of the scale, representing a high proportion of farms with a very small percentage of irrigated land and of production. Farms defined as minifundia represent 71% of the units and 5% of the land area (FAO, 1987). Between these two extremes there is a sector which might be compared with the average European peasant, the size of which varies depending on the countries involved, and which is normally concentrated in certain regions and commercial products with a high unit value.

This structure has been reached as a result of significant changes in agriculture. In several countries of the region, agrarian reform schemes have been carried out, but in several cases, these have subsequently regressed, because of the rigidity of the social structure. In a few cases, the agrarian reform programme was complemented with certain policies designed to support the improvement of productivity among minifundia farmers. Situations in which Latin American reforms have succeeded in solving the problem of equity in the agrarian structure are even more exceptional (FAO, 1987, pp. 40-41).

The other structural change, which cannot be ignored, is the emergence of a modern agricultural sector which makes a significant contribu-

tion to the growth of exports and of production. This, however, seems to have generated a negative effect, associated with the type of technological modernization adopted, which seems to have contributed to a) widening the income gap between large land exploitations that are modernized and small ones that cannot do so; b) reducing work demand of the large exploitations, directly affecting the minifundists that need waged employment as a complement to obtain a livable income, and c) increasing the profitability of the land and its value along with it, making even more remote the possibility of the peasantry, which has no land or has an insufficient amount, being able to gain access to it (FAO, 1987, p. 398).

p) ***Natural resources base and type of leadership***

In societies that have an abundance of natural resources in which ownership tends to be highly concentrated, either in the private or in the public sector, leadership tends to be based on the usufruct of rents associated with those natural resources. This may lead to the formation of class-based societies and States that give priority to the accumulation of wealth.

Any *rentier* system, of whatever kind, is based on a privilege or a monopoly that is politically established. The predominance of certain *rentier* elements in leadership does not preclude the coexistence, on an associated or subordinate level, of sectors representing industry. However, as long as the main leadership is associated with the usufruct of rents from natural resources, which are often linked to financial intermediation, this leadership, which presupposes a certain world view, can influence the operation of the society as a whole. Assuming that the values of the élite spread throughout society, one may say that in societies in which a *rentier* leadership prevails, this world view will probably penetrate different spheres of the public sector, the private sector and other institutions which take part in its operation (political groups, armed forces, trade associations and unions, professional organizations, bureaucracy) and be disseminated among them. The practical expression of this phenomenon (localism, lack of foresight, aversion to risk and technological innovation, use of institutional positions for personal advantage) at different levels and in different ways is beyond the scope of this study, but it is a topic which should be investigated in greater depth, especially in Latin America, where it seems to be more significant than has hitherto been recognized.

If stratification in society is to be overcome, there must be a redefinition of the political society and of the civil society, the sphere of the former being the State and the sphere of the latter being the market. Consequently, an analysis of the nature of the relationship between State and market in the different countries, as well as of the degree to which the

Figure VIII

ROLE OF POLICIES

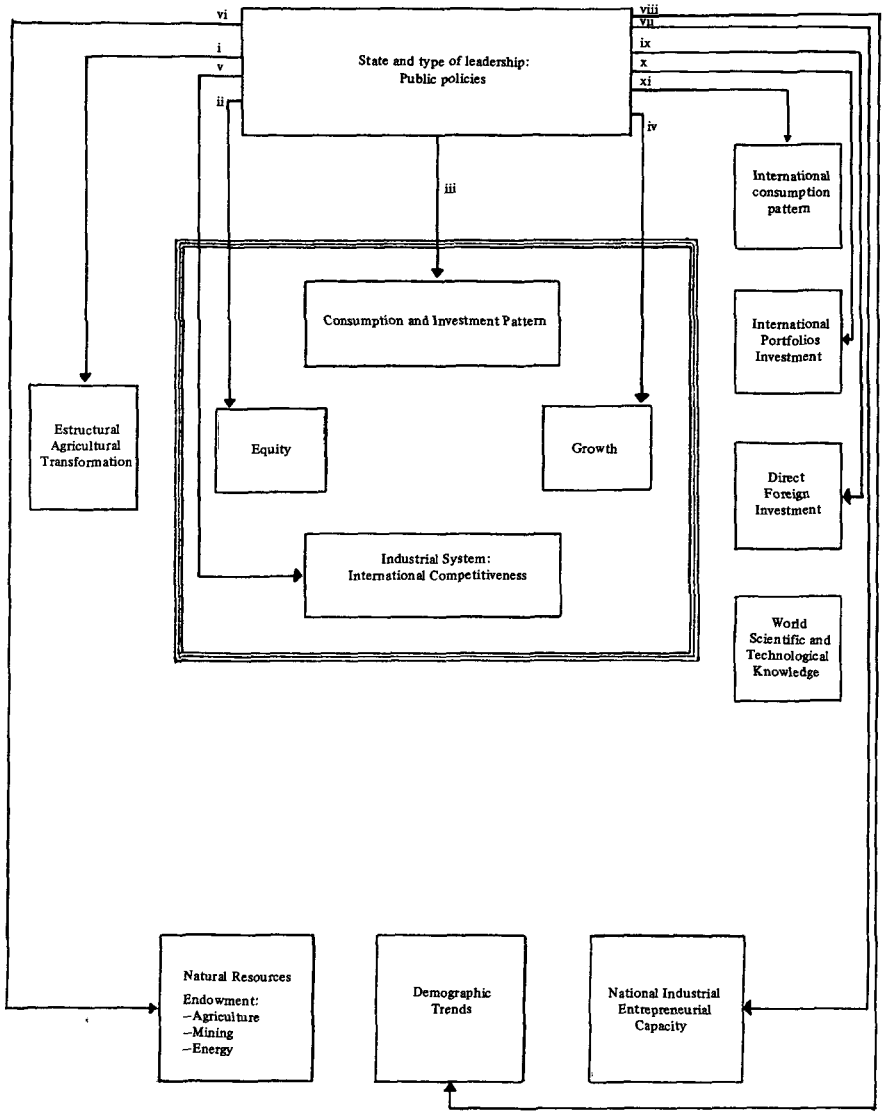

two are consolidated and reflected in institutional form, is vital, not only to gain a better understanding of their operation, but also to allow for the design of policies which can have a real effect in changing them.

q) ***Supply of natural resources and distribution of income***

The supply of natural resources, which in many countries is concentrated in a small proportion of the population or centralized in public enterprises, often has a negative influence on the income-distribution process. When private enterprises, either national or foreign, are concerned, resources are concentrated in a few hands; in the case of public enterprises, the *rentier* system may be reproduced within each enterprise, which then becomes a virtual bureaucratic feudal domain, with a considerable proportion of the rent generated staying inside the institution, in the form of wages and benefits that are much higher than those received by other production activities. Transferring rights over those enterprises to either the private or the public sector, as the case may be, would not change this fundamental fact, which has to do more with the existence of attitudes about the accumulation of wealth than with a particular form of ownership.

3. Effect of economic policies

In the preceding paragraphs, we have briefly mentioned some of the economic policy instruments which can affect the way a society works. This is illustrated in figures IV and VIII.

In the following chapters, we shall discuss the different ways the system works in countries that have different levels of development and economic systems, giving some examples of the use of specific policy instruments. Assuming that all countries share the goal of growth with equity, and that knowledge regarding the nature and usefulness of the different policy instruments is widely disseminated throughout the world, we will have to reach the conclusion that the different ways in which these come together in real situations must be explained in terms of structural factors, some of which cannot be changed (size, availability of resources, geographical location) and others which are related to the ongoing process of economic, social, political and cultural change. If we could help achieve the twofold goal of growth with equity simply by applying suitable economic policies, about which opinions differ, there would be much less conflict and poverty than we see in today's world, where there is clearly a struggle between passions and interests that are difficult to control.

IV. UNITED STATES, JAPAN AND THE FEDERAL REPUBLIC OF GERMANY: WINNERS AND LOSERS

1. Introduction

These three countries have a population —approximately 9% of the world total— which is equivalent to the population of Latin America; nevertheless, they own almost half the resources allocated to research and development throughout the world and almost three-fourths of those allocated by the OECD countries to this effort. The per capita availability of research and development resources in these three countries is almost five times the world average. At the same time, they generate almost 40% of the world's economic and industrial activity, i.e., their productivity is four times the world average.

The performance of these countries thus determines the profile and the main features of the world's industrial system; independently of commercial tensions, it is in the relations between them that the types of products, the processes, manufacturing systems, types of institutional agreements and access of other countries to technical know-how developed in the different sectors of industry are determined. Thus, a better understanding of the dynamics of industry in these three countries can serve as a backdrop for understanding the action of other countries, especially the Latin American ones.

There are important differences between the United States, Japan and the Federal Republic of Germany (table 11). For example, it is a well-known fact that the United States has a much greater density of scientific production, in relation with its population, than the other two countries. The number of authors of scientific works in relation to the population is seven times higher than the world average (in the case of the Federal Republic of Germany, it is four times higher, and in the case of Japan, two times higher). Nonetheless, the relative importance of industry is much greater in Japan and the Federal Republic of Germany than in the United States. The manufacturing production of Japan and the Federal Republic of Germany together is already 20% higher than that of the United States, although the population of the two countries is 20% lower.

Whereas Japan and the Federal Republic of Germany are particularly inclined to transform know-how into industrial production that is highly competitive, there is in the United States a relative inconsistency between the base of available know-how and the paucity of industrial production. This is partly due to the fact that the United States channels a large volume of resources into military uses, whereas this sector is almost non-existent in Japan and the Federal Republic of Germany, as a result of the provisions taken after World War II. A unique characteristic of Japan is the great density of engineers and scientists in relation to its population; in Japan, this ratio is almost five times higher than the world average, whereas in the United States, it is a little over three times higher, and in the Federal Republic of Germany, a little less than three times higher.

2. The importance of owing natural resources

The main differences which characterize the participation of these countries in international trade are shown in table 12. In the first place, there is a clear contrast between Japan and the Federal Republic of Germany, which have a deficit in all sectors of natural resources, and the United States, which, at least in the agriculture sector, had a large and growing

Table 11

INTERNATIONAL INSERTION

(Percentage of world total early 1980s)

	Latin America	United States	Japan	Federal Republic of Germany
Population	8.0	5.0	2.5	1.3
Gross domestic product	7.0	27.0	9.4	5.8
Manufacturing product	6.0	18.0	11.7	9.4
Capital goods	3.0	14.7	11.1	9.6
Engineers and scientists in R&D	2.4	17.4	12.8	3.4
Research and technological development resources	1.8	30.1	10.2	6.7
Scientific authorship	1.3	42.6	4.9	5.4

Source: Joint ECLAC/UNIDO Industry and Technology Division, based on UNESCO, *Statistical Yearbook*, various years; UNIDO Data Bank; United Nations, *Demographic Yearbook 1986* (ST/ESA/SER.R/16), New York, 1988. United Nations Publication, Sales No. E/F.87.XIII.1; National Science Foundation, *International Science and Technology Data Updated 1986*, Washington, D.C., 1986.

Table 12

UNITED STATES, JAPAN AND FEDERAL REPUBLIC OF GERMANY: TRADE BALANCES BY SECTORS OF ECONOMIC ACTIVITY

(Millions of dollars)

		1970	1975	1981	1982	1983	1984	1985	1986
Agriculture	United States	631	12 069	25 344	19 728	16 518	13 307	3 659	-320
	Japan	-5 292	-13 931	-24 929	-23 508	-23 301	-25 776	-24 264	-27 892
	Federal Republic of Germany	-5 774	-10 145	-13 441	-12 852	-12 868	-15 568	-12 644	-15 266
Manufacturing industry[a]	United States	4 154	21 196	13 369	-3 942	-28 925	-82 377	-107 566	-138 626
	Japan	13 180	42 393	119 152	107 197	113 403	131 689	137 550	162 311
	Federal Republic of Germany	14 424	39 338	62 317	68 174	59 013	60 235	68 131	89 902
Energy	United States	-1 480	-21 922	-73 974	-54 665	-50 349	-53 814	-45 759	-31 652
	Japan	-3 858	-25 432	-72 091	-65 306	-58 636	-59 989	-55 319	-36 565
	Federal Republic of Germany	-1 616	-10 286	-32 723	-29 694	-26 694	-25 545	-26 212	-17 971
Mining	United States	-863	-1 295	-5 183	-3 426	-5 298	-6 424	1 302	-6 087
	Japan	-3 698	-5 734	-11 223	-10 388	-10 055	-10 554	-9 663	-8 657
	Federal Republic of Germany	-2 343	-2 662	-3 835	-3 651	-3 231	-571	-3 319	-3 331
Other sectors	United States	196	640	758	-280	-1 268	188	-245	-3 961
	Japan	105	594	-2 168	-1 095	-877	-1 758	-1 992	-6 454
	Federal Republic of Germany	-318	-431	-176	-712	375	171	-484	-775
Total	United States	2 638	10 688	-39 686	-42 585	-69 322	-129 120	-148 609	-180 646
	Japan	437	-2 110	8 741	6 900	20 534	33 611	46 362	82 743
	Federal Republic of Germany	4 375	15 814	12 142	21 092	16 595	18 722	25 472	52 559

Source: Joint ECLAC/UNIDO Industry and Technology Division, based on United Nations, *International Trade Statistics Yearbook* and United Nations, *Commodity Trade Statistics*, 1985 and 1986.

[a]Manufacturing industry includes SITC sections 5-8, except division 68 (non-ferrous metals).

surplus up to the early 1980s. Japan and the Federal Republic of Germany had no alternative, in order to obtain the income necessary to purchase the natural resources they lacked, than to work for a sound position in the trade of manufactures. The United States, on the other hand, with its great natural wealth and its continental size, viewed international trade as a complementary and marginal element. Moreover, there did not seem to be much point in establishing priorities in a continental economy such as that of the United States, which has been noted for its predominance over the last 40 years: its main market is the domestic one, and although the situation of the different sectors may vary over time, in general, at least until the late 1970s, it seemed almost invulnerable. Many publications describe this introverted vision of United States economic, political and academic circles (Branson 1980; Lodge 1986; Zysman and Tyson 1983, among others).

The oil crisis of 1973 seriously affected all three countries. Between 1975 and 1981, energy expenditures rose by US$52 billion in the United States, by US$47 billion in Japan and by US$23 billion in the Federal Republic of Germany, i.e., these three countries suffered a very severe blow from the first oil crisis. The difference, however, lies in the fact that while Japan and the Federal Republic of Germany more than compensated for their increased oil expenditures with the surplus of the manufacturing sector, the United States not only saw its energy deficit increase, but also suffered a considerable reduction in the surplus of the manufacturing sector, which fell by approximately US$8 billion between 1975 and 1981. In Japan, the US$47 billion increase in the energy deficit was more than compensated for by the US$77 billion increase in the surplus of the manufacturing sector. In the Federal Republic of Germany, the US$23 billion increase in the manufacturing sector almost exactly offset the energy deficit.

The above leads to the conclusion that the deterioration of the competitiveness of the United States manufacturing sector cannot be attributed to the energy problem. The three countries suffered the same impact, as regards the energy problem, but the capacity of the manufacturing sector to respond was much more favourable in Japan and the Federal Republic of Germany, because the trends as regards competitiveness and productivity gave them a base of support which allowed them flexibility in responding to the challenge posed by the end of the era of cheap energy.

From 1975 on, the manufacturing sector followed very different directions in the United States, on the one hand, and in Japan and the Federal Republic of Germany, on the other. Around 1986, while Japan and the Federal Republic of Germany had manufacturing surpluses of more than US$250 billion together, the United States already had a deficit of almost US$140 billion. Japan and the Federal Republic of

Germany generated most of the manufacturing surplus worldwide; the United States, on the other hand, had the largest manufacturing deficit in the world.

At the beginning of the 1970s, these three countries had a relatively small surplus; Japan's and the Federal Republic of Germany's surpluses were higher than that of the United States, but were nevertheless comparable. In 15 years, the relative position of the three countries changed radically: the United States, whose pattern of production had served as the reference point during the postwar period, and which at the end of World War II had generated 60% of industrial production, by the mid-1980s had the greatest deficit in the industrial sector, compared with the two countries which had been destroyed by the War.

Since 1982, the position of the United States in international trade has been similar to that of most of the Latin American countries; its participation is based on the agricultural sector, in which it has a substantial surplus, and it has a deficit in the manufacturing sector, as well as in other sectors. It is a country which has become concerned about the trend in the terms of trade. If this deteriorating trend in the terms of trade of the agricultural sector *vis à vis* the industrial sector continues —and there is no reason to believe it will not—, the United States position will continue to weaken, even if the volumes of exports and imports of agricultural and industrial products remains constant. This concern, which up to a few years ago was considered part of Latin American folklore, now seems to be a salient feature in the evolution of the country which leads the world economy.

3. What does competitiveness mean?

Figure IX shows the similarities in the structural changes which took place in the industrial sectors of the three countries between 1970 and 1987 (forecast for the last two years). In all three cases, the most dynamic branches were electrical equipment (383), plastics (356) and basic chemicals (351). The United States and the Federal Republic of Germany had certain basic elements in common. Japan's leadership in electrical machinery, and especially electronics, was evident since the early 1970s; these branches became the axis for the changes made in the production structure of that country. Japan was less inclined to trust in the petroleum byproducts industry than the other industrialized countries.

In all three countries, the most dynamic sectors were those which called for greater technical innovation and were geared towards the replacement of natural resources by synthetics and the increased automation associated with the penetration of electronics in the capital goods industry and the dissemination and saturation of the pattern of consumption of transport equipment and home appliances.

Figure IX

UNITED STATES, FEDERAL REPUBLIC OF GERMANY AND JAPAN: INDUSTRIAL STRUCTURAL CHANGE, 1970-1987

UNITED STATES

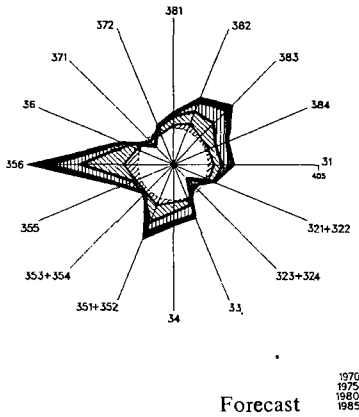

JAPAN

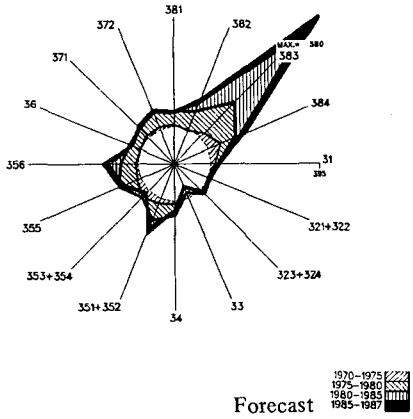

FEDERAL REPUBLIC OF GERMANY

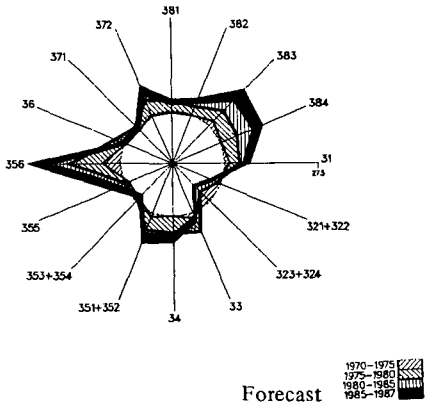

Source: UNIDO.

It is generally agreed that there is a strong link between competitiveness, the adoption of technical progress, the dynamism of industry and increased productivity.

There is complete agreement on the crucial importance of improving competitiveness during a period of transition between two patterns of technology, in order to determine the relative position of countries in the international economy of the future. This general trend is confirmed by the important role played by the different European regional programmes on scientific or technical co-operation aimed at strengthening competitiveness. There is less evidence of consensus on how to measure competitiveness and, of course, even less on how to improve it.

There is agreement on the fact that the deterioration of productivity since the late 1960s, which has been aggravated, especially in the United States, since the mid-1970s, can have serious implications. There is no agreement, however, on the reason for this decline or on what measures should be taken to correct or reverse this trend.

Table 13 shows seven different indicators of international competitiveness for the three countries. The order in which the countries rank remains invariable, however, regardless of the indicator applied: Japan ranks first, the Federal Republic of Germany, second, and the United Stats, third.

As regards the first indicator, it will be noted that expenditures on research and development for civil purposes is much higher in Japan and the Federal Republic of Germany than in the United States; several studies suggest that this may explain the different growth rate of competitiveness in the three countries. The next indicator —growth of industrial exports in the three countries between 1963 and 1983— sets Japan way ahead of the other two countries. Japan's rate of growth doubled those of the Federal Republic of Germany and the United States. The third indicator has to do with the share of high-technology products in total exports of manufactures; in this regard, there is also a significant difference between Japan, on the one hand, and the Federal Republic of Germany and the United States, on the other. The fourth indicator shows the trend in exports of capital goods as a percentage of world exports between 1963 and 1983; in this case, while in Japan, this indicator increased almost five times and in the Federal Republic of Germany it remained constant, in the United States, the figure for 1983 was about 74% of what it had been 20 years earlier. The fifth indicator refers more specifically to the competitiveness of metal products and engineering in the high-technology category, and measures the ratio of exports of those goods to imports during the same year. In 1963, the United States' exports of such goods were almost four times greater than its imports; by 1983, this ratio had fallen by almost half. The United States now exports and imports equivalent amounts of those products. As regards Japan, in

1963, exports were already twice as high as imports, even though the country ranked lower than the United States and the Federal Republic of Germany; at present, however, its exports are almost 10 times greater than its imports of these products. In the Federal Republic of Germany, the ratio remains stable, similar to that of the United States in 1963. Although it has fallen, there is still a significant surplus. As regards the

Table 13

DIFFERENT INDICATORS OF INTERNATIONAL COMPETITIVENESS

(In percentages)

	United States	Japan	Federal Republic of Germany
Civilian expenditures on research and development/GNP 1983-1984	1.8 (3)	2.5 (1)	2.4 (2)
Growth rate manufactured exports 1963-1983	7.9 (3)	18.4 (1)	9.3 (2)
Engineering exports/ total manufactured exports 1983	44 (3)	58 (1)	46 (2)
Engineering exports/ world engineering exports 1983/1963	74 (3)	475 (1)	100 (2)
Engineering exports/ engineering imports			
1983	100	950	267
1963	383	200	380
	(3)	(1)	(2)
Productivity-growth in manufacturing			
1975-1981	1.7	8.7	3.2
1965-1973	2.8	11.0	4.2
	(3)	(1)	(2)
Manufactured exports/ manufactured imports 1979-1981	1.0 (3)	5.0 (1)	1.8 (2)

Source: Joint ECLAC/UNIDO Industry and Technology Division, based on The President's Commission on Industrial Competitiveness, *Global competition: The New Reality*, Washington, D.C., U.S. Government Printing Office, January 1985, p. 100; United Nations, *Bulletin of Statistics on World Trade in Engineering Products*, 1983; World Bank, *World Development Report 1986*, Washington, D.C., July 1986; and OECD, *Productivity in industry*, Paris, 1986.

improvement of productivity —a decisive factor in the long-term development of competitiveness in the different countries— the three countries saw a decline between 1965 and 1973 and from then on until 1981; nevertheless, the sharpest drop was precisely in the United States, the country that had the slowest rate during the preceding period. The drop was not so sharp in the Federal Republic of Germany and was even more moderate in Japan.

Between 1975 and 1981, the rate of growth of productivity in the Federal Republic of Germany was almost twice that of the United States, and Japan's was more than twice that of the Federal Republic of Germany. As a final indicator, which, moreover, is the one we shall use in making international comparisons with other regions, we shall refer to the trend in the ratio between exports and imports of manufactured goods as an average for the period 1979-1981. In the case of Japan, exports were five times higher than imports of manufactured goods; in the Federal Republic of Germany, they were twice as high, and in the United States, they were almost the same. Consequently, in terms of both the level and the evolution of competitiveness, the ranking still remains the same as for the other indicators, with Japan in first place, considerably ahead of the other two countries, and the Federal Republic of Germany in an intermediate position, but usually closer to the United States than to Japan.

The abrupt rise of the dollar in the early 1980s and its sharp fall in 1985 and 1986 have drawn attention to the conjunctural evolution of the United States' competitiveness. However, an analysis of a longer period (1965-1984) may give a better idea of trends and other effects, in addition to the disruption of the exchange rates in the 1980s. Figure X shows each country's share in the exportable supply of metal and engineering products. There is a clear upward trend in the case of Japan, the Federal Republic of Germany is relatively stable, with a slight drop between 1980 and 1984, and the United States' position deteriorates steadily, although this trend is attenuated from 1980 on, despite the rise of the dollar. All three countries accounted for over 40% of the world total, at both the beginning and the end of this period. Since metal and engineering products shape the technological profile of industry at the international level, regardless of any variation in their relative positions, it is obvious that these countries represent a concentration of the technical efforts put into those goods that set the pace for the adoption of technical progress in the production sector.

An analysis of the international competitiveness of these goods, measured by the ratio of exports to imports (Figure XI) —which reflects not only their international importance as a source of exports but also as a means of absorbing capital goods from other countries— shows, for example, that in Japan, whose share on the world market rose signifi-

cantly and rapidly between 1965 and 1970, competitiveness remained constant at a very high level. This was a period when Japan was rapidly increasing both its exports and its imports of capital goods, rapidly absorbing the technology used in the capital goods of other countries. During the 1970s, its contribution to the supply of exportable capital goods continued to climb and became competitive within a wide spectrum of goods, imports stopped growing at the same rate as exports, and the index continued to rise until it reached, around 1984, a level equivalent to almost 14 times more than imports, i.e., it is almost self-sufficient,

Figure X

ENGINEERING PRODUCTS: WORLD MARKET SHARE, 1965-1984

(Percentages)

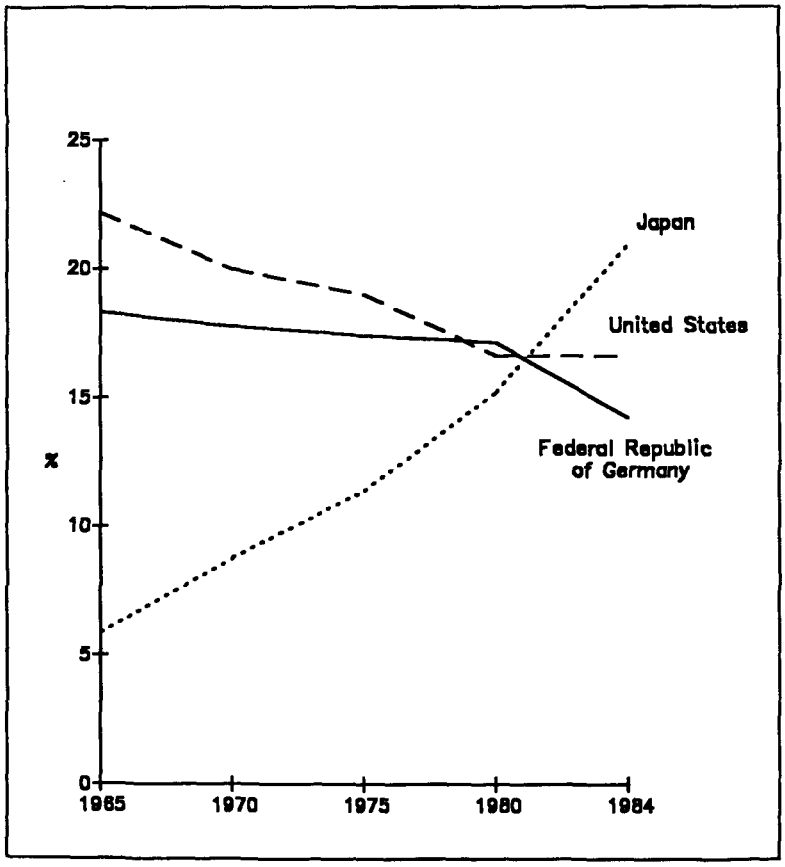

Source: Joint ECLAC/UNIDO Industry and Technology Division.

Figure XI

ENGINEERING PRODUCTS: INTERNATIONAL COMPETITIVENESS, 1965-1984

(Export-import ratio, percentages)

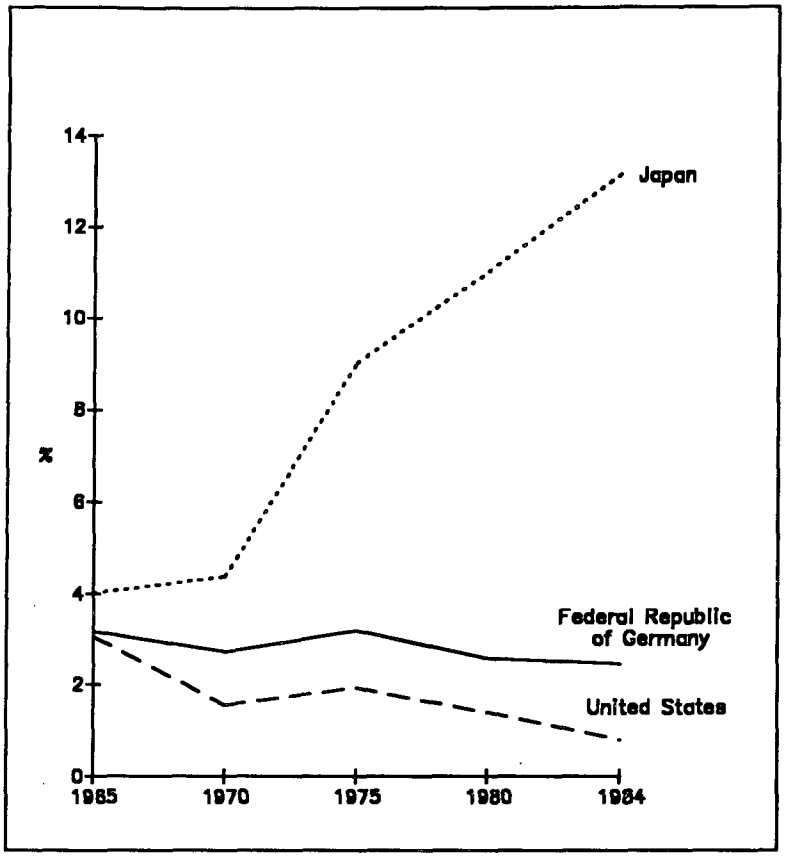

Source: Joint ECLAC/UNIDO Industry and Technology Division.

and its imports of technology incorporated into capital goods is marginal with respect to its exports of those goods. Nevertheless, as regards the technological balance of payments, Japan remains a net importer; this reflects its preference for acquiring non-incorporated technology and the industrial leadership exercised by its national corporations.

In the Federal Republic of Germany, the ratio of exports to imports remains very high, at over 2, and covers a very wide range of goods. This characteristic, which is shared by Japan and Germany in a wide range of capital goods, enabled them, when electronics invaded capital goods in

the late 1970s, to incorporate this technological advance and disseminate it both in the goods-producing sectors and in the service sectors. With this broad and competitive base of capital goods, both countries —and especially Japan— were able to offset the rise in oil prices with a significant increase in the net balance of exports of capital goods, a factor which was decisive in increasing the surplus in the manufacturing sector. In the case of the United States, competitiveness fell steadily between 1965 and 1970, i.e., long before the first oil crisis, and subsequently, after a stage of relative stability between 1970 and 1975, there began another systematic fall before the second crisis and the sharp rise of the dollar. This may help explain why the sharp drop of the dollar, beginning in March 1985, which partly offset the rise, was enough, over the short term, to cancel out the downward trend begun 20 years earlier, when the growth rate of productivity had also begun to fall.

During the period 1965-1984, both the United States and the Federal Republic of Germany applied macroeconomic policies of different types and intensities, using different instruments and applying them in different international contexts. These differences do not seem to have had a decisive effect on the evolution of competitiveness, which is influenced not only by macroeconomic policy but also by sectoral policies, microeconomic aspects of management, institutional factors such as the educational system, the availability of natural resources, the size of the domestic market, and many other factors. Thus, it is perfectly understandable that downward trends in competitiveness should coexist with changes and inconsistencies in macroeconomic policies. Macroeconomics, which does not establish priorities among sectors in which the incorporation of technical progress is a central concern, can hardly have any specific effect (although it can still influence the dynamism of global demand) on those sectors on which variations in productivity and competitiveness are based.

Table 14 shows the categories which represent a high degree of specialization in each country, i.e., whose share in the world market is much higher than their share in total supply of metal and engineering products. In the case of Japan, the products involved are essentially different consumer goods than those which represented the higher degree of specialization in 1977 (ships, sewing machines and boilers, which in 1977 represented 49%, 33% and 31% of the world supply of exports); in other words, over a period of seven years, the category of most highly specialized products has changed radically in Japan, and at least the first two of these are products which have a very high growth rate. In the case of the Federal Republic of Germany and the United States, there is greater stability as regards specialized goods, which are mostly capital goods for specific purposes. Usually, the growth rate of world demand for these products is lower than it is for widely used capital

Table 14

UNITED STATES, FEDERAL REPUBLIC OF GERMANY AND JAPAN: SPECIALIZATION IN CAPITAL GOODS, 1984

Countries	Percentages world share total engineering products	SITC[a] Rev.2	Product	Percentages world share (each item)
Federal Republic of Germany	14.8	718.7	Nuclear reactors	44.0
		726	Printing and book-binding machinery	33.0
		725	Pulp and paper machinery	27.0
Japan	21.9	763	Gramaphone sound recorder	82.6
		751.21	Calculating machines	76.0
		763.88	Dictating machines	72.9
United States	17.3	714.8	Gas turbines, n.e.s.	66.0
		792	Aircraft	44.6
		759	Machinery-parts and accessories for office and automatic data-processing machines	40.1

Source: Joint ECLAC/UNIDO Industry and Technology Division, based on United Nations, *Bulletin of Statistics on World Trade in Engineering Products*, 1984.

[a] United Nations, *Standard International Trade Classification*, Rev.2, 1975, United Nations publication, Sales No. E.75.XVII.6.

or durable consumer goods having a high technology content. In those categories in which Japan has attained a high degree of specialization, it has succeeded in attaining a very high share of the world market. This is particularly interesting in view of the recent trends in exchange rates, since in those categories in which Japan almost has a monopoly of the world's exportable supply, it will take some time for variations in the exchange rate to be reflected in changes in the distribution of the supply among countries.

The aforementioned cases are specific expressions of a more widespread phenomenon: in a wide variety of products, Japan has achieved such a high share of the world market that it is relatively immune, at least over the short term, to the evolution of exchange rates.

With its exports equivalent to almost 14 times more than its imports of metal and engineering products, its domestic market must be practically closed to such goods, with or without absolute comparative advantages, non-tariff barriers or institutional mechanisms which might prevent it from importing in those categories in which it has achieved a high degree of coverage of the world market.

4. The serious deterioration of the industrial competitiveness of the United States

From its position of almost absolute control of the manufacturing sector which it enjoyed 40 years ago, the United States has come to the place where it has such a high deficit of manufactures that there is reason for concern, not only because of the economic implications of this situation, but also because of its political consequences, inasmuch as it affects the balance of and the possibilities for co-ordinating the economic policies of the industrialized countries and hence international economic stability.

An analysis of the evolution of the United States' manufacturing trade during the 1980s —when the downward trend continued— brings to light three cases as regards its relative position (table 15). In the first place, there are countries over which it had a clear advantage in the manufacturing trade during the early years of this decade; in the second place, there are countries with respect to which it had a systematic and growing deficit, but in which United States imports came mainly from firms in other countries; and, in the third place —and this situation has been a subject of growing concern in the United States—, there is the deficit which originates fundamentally from intrafirm trade, i.e., that which is caused by the location of United States corporations in other countries, in search of advantages or in an effort to compensate for disadvantages arising from labour costs or special institutional agreements, as in the case of Canada, in the automobile sector. Intrafirm trade which generates a surplus (with Mexico and the United Kingdom, for example), and thus raises no major objections, is very different from that which generates a deficit (Taiwan, Canada), giving rise to constant controversy.

At the beginning of the 1980s, the United States had a significant surplus with respect to Western Europe (especially the United Kingdom), Latin America (mainly Mexico), and the Near East, which had become a significant purchaser of manufactures financed with the oil surplus. In each case, the surplus was in the order of US$10 billion. During that same year, it already had a significant deficit with the Federal Republic of Germany and Italy, in Europe, and with its main Asian competitors, Japan and the Republic of Korea. In the case of Canada and

Table 15

UNITED STATES: TRADE BALANCE IN MANUFACTURES, 1980-1986

(Millions of dollars)

	1980	1983	1984	1985	1986[a]
World total	**11 326**	**-46 181**	**-98 081**	**-119 347**	**-152 420**
Canada	-517	-6 897	-11 308	-12 054	-18 050
Western Europe	10 296	-3 035	-17 848	-27 398	-36 600
United Kingdom	3 720	1 240	982	-898	-3 850
Federal Republic of Germany	-3 505	-5 288	-8 984	-11 968	-17 200
France	1 103	-542	-2 602	-3 904	-4 000
Italy	-540	-2 750	-4 993	-6 515	-8 150
Latin America	12 869	-3 450	-5 153	-1 558	500
Mexico	2 642	425	1 049	2 262	1 450
Brazil	789	-2 416	-5 005	-4 426	-3 350
Venezuela	520	-1 237	-1 444	-1 128	-1 100
Argentina	1 751	57	-68	-342	-200
Other Latin American countries	1 451	-279	315	2 076	3 710
Japan	-19 386	-28 235	-43 709	-54 987	-64 700
Taiwan	-4 284	-8 922	-12 584	-14 309	-16 200
Republic of Korea	-1 697	-3 736	-5 799	-6 355	-8 850
Near East	8 846	9 052	6 332	4 363	2 900
Africa	3 495	2 300	382	613	-820

Source: Joint ECLAC/UNIDO Industry and Technology Division, based on U.S. Department of Commerce, *U.S. Industrial Outlook 1986*, Washington, D.C., January 1986.

[a]Estimates based on first seven months data.

Taiwan, which fall within the third category, i.e., in which the United States' deficit has a strong component of intrafirm trade of United States firms, the deficit was already becoming very large, especially in the case of Taiwan. From 1980 to 1985, the United States' manufacturing trade balance fell from a surplus of US$11 billion in 1980 to a deficit of US$152 billion in 1987. The rise of the dollar played a large part in this situation, at least during the period 1983-1984.

Nevertheless, different countries performed differently. The only ones with which the United States had a surplus —although a smaller one— up to 1985 were the United Kingdom, Mexico, the small and medium-sized Latin American countries, the Near East and Africa; with all the others, it had a deficit in 1985. Those which played the greatest

part in lowering the United States' manufacturing surplus were Europe (US$35 billion), Japan (US$34 billion), Latin America (US$14 billion) —a drop which is associated with the difficult financial situation of the region— and the Republic of Korea-Taiwan (approximately US$14 billion).

In Western Europe, the greatest reduction was caused by the Federal Republic of Germany and Italy, which together account for US$13 billion worth of loss for the United States. In Latin America, Brazil accounts for the largest percentage of the decline, i.e., almost US$3 billion.

The countries and regions with which the United States has a surplus in the manufacturing trade are characterized by a difficult economic situation, both currently and in the foreseeable future. This does not look promising for the United States' surplus with those countries, inasmuch as, on the one hand, the growth rate of their imports is not likely to pick up during the next few years and, on the other hand, several of these countries, especially Mexico and the Near Eastern and African countries, tend to adjust the value of their currency to the dollar; hence, the drop in the dollar will not improve the relative position of the United States.

The steady and growing structural deficit of the United States with respect to certain countries with which a change in exchange parity might, theoretically, have a greater impact because of their long and steady development, appears to have been caused by institutional factors associated with the organization of the production system, the operation of corporations, the educational system, and the ability to translate scientific know-how into production efficiency, all of which play a part in ensuring that any change in exchange parity will have a limited short-term effect.

Tables 16 and 17 show an analysis of the type of product that is associated with this evolution, with a distinction being made between smokestack industries, i.e., the traditional capital-intensive sectors such as the steel and automobile industries (table 16) and the high-technology sectors (table 17), especially electronics, pharmaceuticals and special plastics.

The picture is different for the two types of products. In the first case, around 1980, i.e., before the rise of the dollar, the United States had a surplus only with respect to the Latin American countries, except Brazil, and with the Near East; with the other countries and regions, it already had a deficit. Around 1985, the United States only had a surplus with Venezuela and the Near Eastern countries, although in both cases, the surplus had fallen considerably, no doubt as a result of the increasing economic weakness of the oil countries during the 1980s. The magnitudes and absolute values were very different in the case of high-

Table 16

UNITED STATES: TRADE BALANCE FOR SMOKESTACK INDUSTRIES, BY COUNTRY, 1980-1985

(Millions of dollars)

	1980	1983	1984	1985[a]
World	**-21 445**	**-38 891**	**-55 791**	**-63 759**
Canada	-1 760	-6 151	-10 452	-8 641
Western Europe	-6 239	-10 935	-15 047	-18 906
United Kingdom	-675	-1 550	-1 081	-1 678
Federal Republic of Germany	-5 128	-5 170	-7 260	-9 364
France	-925	-1 485	-1 984	-2 140
Italy	-475	-666	-1 035	-1 150
Latin America	3 734	-1 996	-2 668	-2 144
Mexico	2 480	-634	-532	-487
Brazil	-229	-934	-1 659	-1 592
Venezuela	823	303	323	338
Argentina	282	-47	-89	-84
Other Latin American countries	378	-684	-710	-321
Japan	-17 238	-19 697	-25 413	-31 373
Taiwan	-325	-658	-952	-1 217
Republic of Korea	-493	-898	-1 288	-1 410
Near East	1 984	2 032	1 428	963
Africa	-927	-526	-943	-667

Source: Joint ECLAC/UNIDO Industry and Technology Division, based on U.S. Department of Commerce, *U.S. Industrial Outlook 1985*, Washington, D.C., January 1985.

[a]Estimates based on first seven months data.

technology products. In 1980, the United States had a deficit in high-technology products only with Japan and Taiwan, and it had a surplus with the rest of the world; around 1985, this was still the case, but the United States also had a deficit with the Republic of Korea, and it maintained its surplus with the other countries.

The main sources of the United States' surplus in this type of products were Canada, the United Kingdom and Latin America. As regards the Federal Republic of Germany, in 1985, the United States had a deficit of US$11 billion for the manufacturing sector as a whole, and during that same year, it had a surplus of somewhat over US$2 billion in high-technology products. It is interesting to note this in order to clarify and desegregate the competitive relationship between the United States and the Federal Republic of Germany.

Almost half the increase in the deficit between 1980 and 1985 may be attributed to non-durable consumer products, which are usually highly labour-intensive. Although the trend is different for different types of product, in all cases —smokestack, high-technology and, especially, traditional non-durable consumer products— a significant deficit occurred during the course of the decade. The United States managed to maintain a surplus in high-technology products up to 1985, but its relative position had deteriorated by almost US$20 billion over those five years. Preliminary studies for 1986 indicate that during that year, for the first time, the United States showed a deficit in this type of sector, and that this affected the computer and aerospace sectors (the latter being increasingly threatened by European industry), which were the main sources of surpluses in this category.

Table 17

UNITED STATES: TRADE BALANCE FOR HIGH-TECHNOLOGY INDUSTRIES, BY COUNTRY, 1980-1985

(Millions of dollars)

	1980	1983	1984	1985[a]
World	**25 889**	**17 708**	**6 589**	**6 717**
Canada	3 225	3 662	3 758	3 772
Western Europe	13 264	13 725	14 449	12 769
United Kingdom	2 748	3 245	3 194	3 415
Federal Republic of Germany	2 067	1 714	1 845	2 370
France	1 675	1 609	1 047	331
Italy	922	613	685	1 011
Latin America	5 606	2 686	2 637	3 154
Mexico	1 381	129	332	485
Brazil	986	559	275	489
Venezuela	820	494	542	601
Argentina	754	343	311	291
Other Latin American countries	1 665	1 160	1 177	1 291
Japan	-2 567	-7 269	-14 078	-16 125
Taiwan	-565	-1 475	-2 496	-2 712
Republic of Korea	85	-176	-782	-585
Near East	1 980	2 858	2 450	2 496
Africa	1 490	1 659	1 604	1 176

Source: Joint ECLAC/UNIDO Industry and Technology Division, based on U.S. Department of Commerce, *U.S. Industrial Outlook 1985*, Washington, D.C., January 1985.

[a] Estimates based on first seven months data.

5. Is the United States living beyond its means?

A set of indicators has been estimated which makes it possible, at the macroeconomic and microeconomic levels, to assess the relative importance of consumption and investment in each of the three countries. This will show the relative importance which each of them implicitly attributes to the present in comparison with the future.

The set of indicators clearly shows that in the United States, consumption is relatively more important; Japan would be at the other extreme, and in the middle would be the Federal Republic of Germany. This ranking holds regardless of the indicator applied (table 18).

At the macroeconomic level, consumption represents 84% in the United States and 69% in Japan, while in the Federal Republic of Germany it represents 77%; this reflects the relationship of savings to product in each country. Consequently, the same order holds. If attention is centered on the proportion of available family income which is devoted to savings, the difference is more notable: in Japan, the figure is 22.5%, almost double the 13% shown by the Federal Republic of Germany, compared with 5.2% for the United States (1984). Without going into a discussion on the direction of causality, whether investment-savings or savings-investment, the rate of investment in Japan is 28%, in the Federal Republic of Germany, it is 21%, and in the United States, 19%.

Rates of investment differ less than available savings, because part of the savings in Japan and the Federal Republic of Germany have allowed for a higher rate of investment in the United States than it could have attained with its domestic savings. To the resources originating in Japan and the Federal Republic of Germany are added those from other countries, especially the Latin American ones, as net transfers of resources and the flight of capital. From 1985 onwards, the United States became a net debtor.

As regards the automobile —a symbol of the United States consumption pattern and a source of inspiration and a model for all the world—, it plays an important role not only because of the importance attached to its purchase in the family budget, but also because of the physical infrastructure and the energy endowment and, to a large extent, the lifestyle which goes hand-in-hand with this mode of transport. Although the three countries have similar per capita income levels (a comparison which is now quite difficult because of variations in exchange rates), the differences in density of vehicles are radical. In the United States, there is almost one vehicle for every two inhabitants; in the Federal Republic of Germany, one for every three inhabitants, and in Japan, one for somewhat less than five inhabitants. To this should be added the fact that both Japan and the Federal Republic of Germany are large net exporters of automobiles to the international market, especially

to the United States, where these products account for a significant share of the domestic market (28% in 1986) (Department of Commerce, 1987).

If attention had been centered solely on this indicator, this factor could have been offset by several others, such as population density, territory, availability of public transport, etc. This greater frugality, or

Table 18

CONSUMPTION PATTERN: DIFFERENT INDICATORS

	United States	Japan	Federal Republic of Germany
Consumption/GDP 1984 (%)	84 (1)	69 (3)	77 (2)
Gross domestic savings/GDP (%)	16 (1)	31 (3)	23 (2)
Gross domestic savings/disposable income 1984	5.2 (1)	22.5 (3)	12.8 (2)
Gross fixed capital formation/GDP (%) - 1984	19 (1)	28 (3)	21 (2)
Automobiles/1 000 persons - 1981	526 (1)	185 (3)	346 (2)
Persons/room dwelling space - 1980	0.5 (1)	1.0 (3)	0.7 (2)
Dwellings with fix bath/shower - Percentage 1979	95.2 (1)	65.6 (3)	81.8 (2)
Energy consumption per capita - 1980 (kg of oil equivalent)	7 302 (1)	3 135 (3)	4 238 (2)
Daily calorie supply per capita/needs - 1983	137 (1)	113 (3)	130 (2)
Animal proteins: grams inhabitants per day - 1984	73 (1)	46 (3)	69 (2)
Telephones: number/1 000 inhabitants - 1984	760 (1)	555 (3)	621 (2)

Source: Joint ECLAC/UNIDO Industry and Technology Division, based on The President's Commission on Industrial Competitiveness, *Global competition: The New Reality*, Washington D.C., U.S. Government Printing Office, January 1985, p. 50; and World Bank, *World Development Report 1986*, Washington, D.C., July 1986.

"austerity', as regards automobiles —the unit value of which may be compared to the investment required to generate a job in a small or medium-sized firm in the manufacturing sector— may be explained by more far-reaching factors than those mentioned above, such as differences in the availability of consumer credit, as well as the cost of maintenance, in the full meaning of the word, on the domestic markets.

The next two indicators in table 18 (density of persons per room and type of room available) confirm the ranking of the countries. Population density per room —even without taking into account area— is twice as high in Japan and 40% higher in Germany than in the United States. The same is true of the proportion of rooms to bathrooms, for which the same order holds.

As regards energy consumption —which is related both to dwelling patterns and to transport—, it will again be noted that the availability of energy in the United States is more than twice that of Japan and almost two times higher than that of the Federal Republic of Germany. There are also notable differences in regard to the availability of calories per day, even without considering the source.

The above comparison shows that consumerism is much more pronounced in the United States than in Japan and the Federal Republic of Germany. The objection might be raised that this is not an exhaustive comparison and that new indicators should be included or that they should be disaggregated and refined, but what is clear is that there is a marked difference in the ratio between consumption and investment in these countries, despite the similarities in per capita income levels.

Another indicator which links the consumption-investment ratio with the sectors to which these factors are assigned is the comparison between the energy consumption patterns of the United States and Japan. In 1982, while in the United States the distribution of the use of energy (in millions of equivalent tons of petroleum) was more or less equal for residential-commercial use and for transport and industry, in Japan industrial use prevailed absolutely. In the United States, residential-commercial use accounted for 35%, followed by transport, with 34% and, finally, by industrial use, with 31%. At first glance, this structure seems to coincide with the aforementioned indicators of automobile density and density and level of rooms. In Japan, the industrial sector absorbs more than half the energy used (53%), and is followed by residential use, with 27%, while transport accounts for only 20% (McGraw, 1986, p. 195). In these two extreme cases —the United States and Japan—, consumption and investment patterns are very different, reflecting the substantial difference in the prospects and the shortages with which these countries take part in the international market.

6. The emergence of different national patterns

Figure XII shows the relationship between the objectives of growth and equity and two of the factors we have discussed specifically, i.e., the international competitiveness of the industrial sector and consumption patterns. The indicators used for each dimension are the following: *growth*, rate of increase of GDP per capita between 1960 and 1979 (adjusted); *equity*, ratio between the income of the poorest 40% of the population and the income of the richest 10% of the population; *competitiveness*, the ratio of exports to imports of manufactures as an average for the period 1979-1981 and, to illustrate the degree of *austerity* of consumption patterns, the density of automobile consumption, as shown in previous tables (13 and 18). This ranking does not change, as regards either competitiveness or consumption patterns, if any of the other indicators considered is used. This should explain any reservations that might be raised concerning the specific nature of the indicator used. In other words, the order of the three countries in either of those two dimensions does not change with any of the other types of measurements mentioned above. This scheme for measuring the four dimensions will be used for all international comparisons throughout the remainder of this study.

Assuming the countries share the objectives of growth and equity, Japan would rank higher than the Federal Republic of Germany, which in turn would rank higher than the United States. This higher position holds for the achievement of both objectives, which shows that there is no law of compensation between the two, and refutes one of the basic premises of traditional thinking on these issues. Convergence towards both objectives is associated, however, with certain conditions which have to do with consumption patterns and international competitiveness; in other words, the superiority of Japan with respect to the other two countries, as far as growth and equity are concerned, has to do with greater austerity and international competitiveness, which suggests that, according to the reasoning explained in the previous chapter, frugality and competitiveness favour the attainment of the twofold objective of growth and equity. As regards competitiveness, it seems that the lack of natural resources has a positive influence in improving the competitiveness of the industrial sector, which helps promote both growth and equity.

Equity directly strengthens growth, as it generates more frugal consumption patterns and frees resources for investment, but it also supports growth in that a greater degree of economic and social integration, symbolized by the equity indicator, enhances the society's inclination to choose the long-term objectives that go hand-in-hand with growth. Looking at it the other way around, growth directly favours

Figure XII

UNITED STATES, JAPAN, FEDERAL REPUBLIC OF GERMANY: STRATEGIC PROFILES

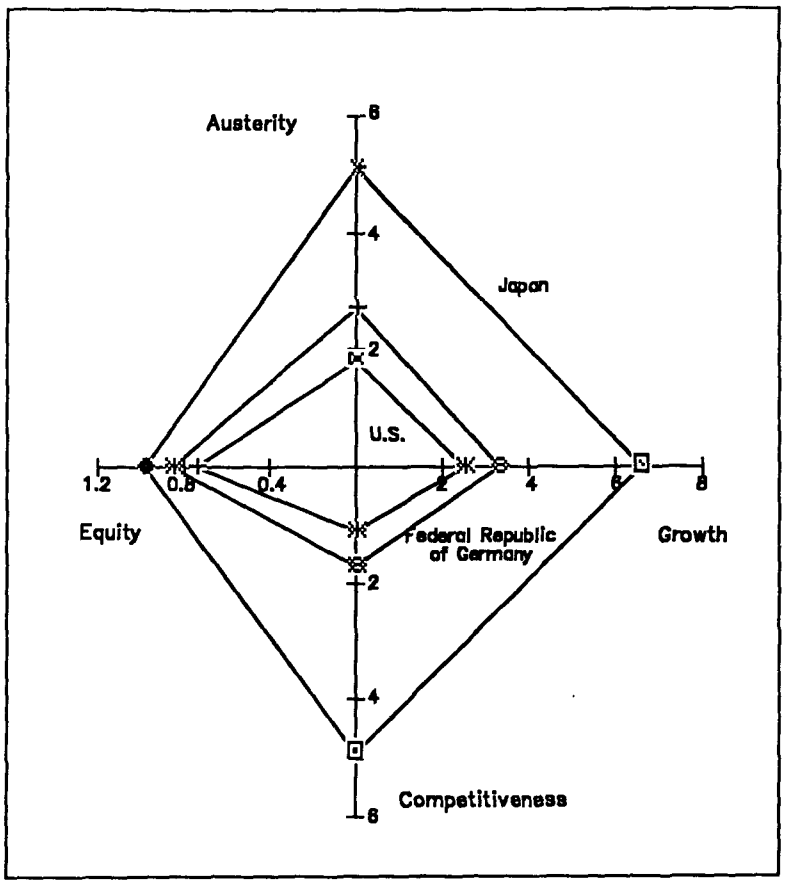

Source: Joint ECLAC/UNIDO Industry and Technology Division.

equity by promoting increased competitiveness, helping to accelerate the incorporation of technical progress and create a new production capacity, and it favours equity indirectly in that, by enhancing the legitimacy of the political and social system, it makes the remaining inequities more bearable, thus fostering stability in the growth process. This stability, in turn, will contribute to the establishment of an institutionality that will favour and provide a sound base for growth and equity.

Compared with the United States, Japan has followed an industrialization pattern that has made it highly competitive internationally, i.e., it accelerates the capacity for adoption of technical progress, and hence helps raise productivity associated with a frugal consumption pattern, promoted by equitable income distribution, which in different ways strengthens growth, dynamism, equity, frugality and competitiveness. In the United States, there is a relative lack of competitiveness, greater inequity in the distribution of income, more affluent consumption and, in certain aspects, a slower growth rate.

Sporadic growth can go hand-in-hand with inequity and affluent consumption patterns, but in order for growth to be steady, it appears that competitiveness must be linked with austerity, which is closely related with equity. One might think of growth as the main objective and think that equity would follow naturally (a very common idea in Latin American thinking for several decades which has not yet been confirmed by experience). This would mean ignoring the impact of inequity on consumption patterns and disregarding the possible social tensions and subsequent shortage of resources for investment with affluent consumption patterns. Although competitiveness can increase rapidly, such growth will be weak and sporadic.

The Federal Republic of Germany shows an interesting balance, as it is much more open to international trade than Japan and the United States, and at the same time, has a high degree of articulation and internal social agreement, with the State playing a much greater role than in the other two cases.

7. The United States and Japan

Without presuming to be original or exhaustive, we might say that a basic difference between these two countries is that the United States looks at the world from the top, with a self-satisfied attitude, and that Japan, its powerful challenger, has had a history that has not been free of trouble, but it has had the will to forge its own destiny. On the one hand is a continental economy, whose language, monetary unit and lifestyle have, since World War II, become a universal model; on the other is a small island territory, whose basic asset is its population, directed by a leadership whose internal legitimacy is linked to the recovery of the nation's dignity and the conquest of international markets and, consequently, penetration in the market of the most powerful country in the world.

The strategic obsession and the long-term visions which characterize Japan provide encouragement and sectoral orientation to its economic growth, while at the same time they are legitimated and fed back into by

the rapid growth rate achieved. This self-propelling process of growth, increased productivity, international competitiveness and legitimation of the internal political leadership finds its fullest expression in Japan. In the United States, the relatively slow rate of economic growth of the postwar period has gone hand-in-hand, since the mid-1960s, with a weak growth in productivity, declining international competitiveness, frequent changes in policies and short-term economic measures and a lack of strategic sectoral options.

The fact that industry is much stronger in Japan than in the United States (31% and 23% of GNP, respectively) is not due to ideological differences regarding development, but rather to the almost total lack of natural resources in Japan, for the supply of which the country has to rely only on the intellectual value added which its population is able to incorporate into the manufacturing sector.

The United States' loss of international competitiveness *vis à vis* Japan in the manufacturing sector affects not only the low-technology sector (textiles, naval industry), but also middle-level (automobiles, television sets) and high-technology (computer equipment) sectors.

During the last few decades, the self-complacency of the United States has only been shaken by the launching of Sputnik in 1957 and by the wave of imports from Japan in the late 1960s. The superiority of Japanese engineering is reflected in the density of engineering students (1982), which is double that of the United States. Whereas in the United States, one of every 400 citizens is a lawyer, in Japan, there is one lawyer for every 10 000 inhabitants (25 times less than in the United States). That is why, while two thirds of Japan's corporate advisors have been trained as engineers, in the United States, a similar proportion of executives have been trained in law or finance. This is not surprising, given one country's obsession with international competitiveness and the other's concern with growth through mergers and conglomerates. This paper entrepreneurialism has had a tremendous impact on Latin America, although the results have been different in different cases.

Whereas in Japan, the prevailing concept is that of the nation-family, in the United States, the society reflects the forces of the market. Even allowing for any reservations with respect to figures on income distribution, the fact is that Japan and the Scandinavian countries have the highest levels of equity among the industrialized countries, while the United States and France have the lowest. Management-labour relations are also much more harmonious in Japan.

Aside from discussing the cultural, axiological and even religious differences which might explain the different characteristics of the various industrialization patterns and their influence on growth and employment, it might be useful to bring to mind some of the economic

policy instruments which have played a part in obtaining the aforementioned results.

Although Japan, like the rest of the world, has adopted as a model the consumption patterns of the United States, it has done so, above all, in the interest of producing the goods which the United States wants, on more favourable terms as regards costs and quality. For Japan, the model is important primarily because its production and export strategy are designed to meet that demand.

When it comes to copying that consumption pattern on the domestic market, however, measures are taken to make it possible to gradually disseminate this pattern throughout the country, while respecting the basic requirements for growth that have been established. The modern lifestyle is imitated, but the rate of absorption is monitored so as to bring it in harmony with the strategic internal objective of growth and, consequently, of competitiveness. Two elements play a vital role in the United States' consumption pattern, both quantitatively and qualitatively: the automobile and the residential dwelling, which account for a proportion of family income that is constantly increasing and is higher in the case of higher incomes. As regards these two categories of expenditure, Japan has taken measures that make it possible to moderate the adoption of this pattern on the domestic market as compared with the country of origin. A policy is applied which is aimed at systematically restricting consumption and encouraging saving, both as regards the dwelling and as regards overall purchases of consumer goods, especially durable ones.

Whereas in the United States, returns on savings accounts are taxed and interest on consumer credit is exempt, the opposite is the case in Japan. In the United States, in the housing sector, aside from the fact that the competent institutions are in a position to offer lower interest rates than the banks, mortgage interest payments are exempt, even for a second or a third dwelling. In Japan, housing loans are sharply restricted, thus obliging the people to make a systematic and prolonged savings effort. During the time required to save the necessary amount, these savings are available for investment. Moreover, the institutional savings-account mechanism is located in thousands of post offices throughout the country, which makes it more accessible to the population. This greater propensity of Japanese families to save is strengthened by the companies' payment system, which includes bonuses paid twice a year, and which can amount to between one third and one fourth of real wages. These large amounts, which are received sporadically, tend to encourage savings. In addition, the pension system based on a single lump-sum payment instead of periodical payments is another factor which encourages saving. To this must be added a very weak social security system, which causes families to devote significant amounts of their resources to provide for old age or sickness (McGraw, 1986).

To the greater availability of family savings are added certain mechanisms which tend to channel these savings towards investment. In this, a direct role is played by the financial intermediation system which, although private, is regulated by the Bank of Japan and the Ministry of Finance, which establish rules guiding the use of resources for the more capital-intensive sectors, in which a series of priorities are set. Up until a few years ago, the taking of capital out of the country was almost totally restricted, i.e., savings remained in the country and were channelled, at least to a certain extent, into the priority sectors. This process of generating domestic savings and channelling them into priority sectors took place within the framework of a series of specific programmes which were designed to close this cycle of mutually reinforcing growth and competitiveness.

Some instruments which played a decisive role in Japan have hardly been used in the United States, such as the set of provisions aimed at encouraging the acquisition of technology abroad, through different means, by joining the efforts of different corporations and co-ordinating them according to the criteria on priority sectors set forth in MITI. One of the more important of these is the procedure known as reverse engineering, which consists of purchasing technologically complex goods in order to disassemble, reconstruct them and improve them in Japan. Moreover, contrary to the other industrialized countries and the Latin American ones, Japan adopted a very restrictive policy on foreign investment in the industrial sector, arguing that the domestic market was a culture medium for the national industrial sector and that turning that market over to foreign corporations would jeopardize the ability of national companies to acquire the knowledge and the support of a large and growing domestic market in order to penetrate the international market.

In addition, Japan's well-known policy of restricting imports tended to foster internal competition among Japanese companies, but within the context of a captive market. Another difference has to do with the sectoral component of fiscal policy: in Japan, this tradition goes back to the Meiji era, when, in addition to an accounting system for public expenditures and income which made it possible to protect macroeconomic equilibria, a set of accounts was kept for certain sectors which at that time were particularly important, such as the steel and naval industries, railways, mining and the silk industry. Since the Meiji era, the public sector has very realistically assumed responsibility not only for monitoring macroeconomic equilibria, but also for allocating specific items to priority sectors.

This tradition persisted, and it marks a fundamental difference from the conception of macroeconomic policy held by the other industrialized countries. In them, and especially in the United States, intersec-

toral neutrality is assumed, i.e., it is assumed that differences among sectors are not important because the market will take care of them. Japan, on the other hand, attaches a clear priority, in tax policies, to the industrial sector, and within it, to those branches which appear to have a higher content of technical advances and a potential for growth on the domestic and international markets. A comparison of the ratio of taxes to sales in 1981, for overall economic activity, will show that it is slightly higher in Japan (1.9%) than in the United States (1.1%). Nevertheless, while in the United States the ratio of taxes to sales is 3.5% for the chemical industry and 3.3% for machinery, which is triple the overall ratio, in Japan the ratios for those same sectors are 1.5 and 1.8, which is lower than the overall coefficient. On the other hand, in the United States, the rate of taxation on sales in the financial sector is 1.4%, while in Japan it is 2.3%. Thus, the overall tax rate is slightly higher in Japan, but much lower in the high-technology industrial branches and higher in the financial sector, contrary to the situation in the United States.

In brief, apart from any axiological and religious factors which might explain these differences but which go beyond the scope of economics, there are certain well-defined and specific instruments which may partly account for the differences between the two industrialization patterns and their capacity to contribute to the simultaneous achievement of the objectives of growth and equity. Moreover, the frequency with which Confucius is mentioned to explain the success of southeastern Asia does not fit in with the fact that the same influence used to be mentioned to try to explain the late developing of China.

It is worth mentioning, by the way, that equity improved in Japan during the United States occupation, when the large conglomerates were weakened and an effort was made to promote redistribution, both of agricultural property and, to some extent, of the large urban properties (McGraw, 1986).

These substantially different economic policy instruments were applied in the context of the State playing a role which, at a certain level of aggregation, seems to be similar in the two countries. A comparison of the relative importance of public expenditure and of the role of public enterprises in industrial production in Japan and the United States might lead to the conclusion that the State plays a similar role in the two countries; in both cases, State participation is much lower than in the industrialized countries of Europe, especially the Federal Republic of Germany. This similarity, however, conceals certain fundamental differences in the orientation of public sector instruments, and Japan seems to have more in common with the Federal Republic of Germany, even though in the latter the public sector plays a much more important role, both in the GNP and in the industrial corporations.

It appears, therefore, that aggregate magnitudes are not enough to explain the role of the State in the industrialization pattern adopted; this confirms the weakness of any macroeconomic theory which looks only at indexes that disregard not only specific historical examples, but also the concrete use of different policy instruments. In Japan, the almost symbiotic relationship between the State and the large corporate groups makes State intervention in production unnecessary. This does not mean that the scanty participation of the State can be compared with the case of the United States, where there is a lack of co-ordination between the public and the private sectors and where the State is ignored (Lodge and Vogel, 1987). The Federal Republic of Germany, on the other hand, is more similar to Japan as regards the relationship between the public sector, financial intermediaries and the industrial sector, although the State does play a greater role in the Federal Republic of Germany (Zysman, 1983).

One indicator —the relative magnitude of the public deficit— has remained at approximately 5% of the product over the last five years, both in the United States and in Japan. The fundamental difference lies in the fact that whereas that deficit is equivalent to almost the entire amount of private savings available in the United States, in Japan it only represents 35%. In other words, the weight of the public sector and the public deficit are similar, but the deficit has a very different meaning in each case. This has to do with the differences relating to personal savings, as well as with the most important source of savings in Japan —the corporations themselves. In brief, the differences between the United States and Japan are specifically reflected in the economic policy instruments applied.

8. The United States: competitiveness and services

There is a general concern in the United States at the decline in the growth rate of productivity, and the conclusion has immediately been reached that in order to counteract this trend, absolute priority must be given to development and adoption of technical innovation (Landau and Rosenberg, 1986). This consensus, however, conceals a whole range of interpretations on the reasons for this deterioration and the means that are needed in order to correct it.

In the first place, there is disagreement as to what the deterioration of competitiveness means and what role is played by the industrial sector *vis à vis* the services sector. The different positions may be grouped into four categories, obtained by combining different positions, as follows:

	The industrial sector should recover its leadership	Transition towards leadership of the services sector is real and desirable
International competitiveness has seriously deteriorated	A	C
Relative international competitiveness remains stable	B	D

Like any diagram, especially on a complex subject, this one is highly simplified, and does not take into account certain authors whose position lies somewhere between these categories. Within each category, there are considerable differences with regard to questions not covered by the two axes.

Proponents of a specific policy on industry, who fall in box A, argue that there is a clear trend towards deindustrialization and that the United States must adopt a policy decisively aimed at reindustrialization (Tyson, 1986; Alexander, 1986 and others). Box D shows the official policy of the current administration, which holds that there is no deindustrialization and hence that no industrial policy is required. Box C illustrates the position of those who recognize that industrial leadership has declined, both domestically and internationally, but who see this as the confirmation of a desirable transition towards a postindustrial society. Consequently, not only is an industrial policy required, but the outdated leadership of the manufacturing sector must be replaced as soon as possible by the revolutionary leadership of the services sector (Bell, 1981; Bantett, 1987).

Those who recognize and deplore the internal decadence of industrial leadership but at the same time hold that the international competitiveness of United States industry is relatively stable fall in box B. They argue that the domestic recovery of the industrial sector should be promoted without making major institutional changes, but rather by means of existing economic policy instruments. They are skeptical regarding the need for and the institutional viability of an industrial policy in the United States (Badarocco and Yoffie, 1983).

a) *Need for a careful analysis of the relationship between industry and services*

There is a widespread view that society is evolving from an era in which the industrial sector has been the moving force towards a future in which that role will be played by the services sector, thus completing the agriculture-industry- services sequence. This idea is based on two simple and, therefore, appealing observations, i.e., that increased incomes generate a more than proportional demand for services; and that, consequently, the growth of employment in the services sector is greater than the growth of overall employment, so that an increasing proportion of jobs are to be found in services.

On the basis of this idea, in some Latin American countries, policies have been recommended that have actually encouraged the dismantling of the industrial plant, in order to accelerate the advent of the new era. However, some objections may be raised to this concept of the lineal temporal sequence from agriculture to industry and services. Obviously, many increases in services may be explained by the changes experienced by the manufacturing sector as a result of the increase in incomes, the intensification of international competition and the growth of the public sector. The services generated by these changes are closely related, from the technical standpoint, to the industrial sector, but this is a complementary and not a substitutionary relationship, as might be deducted from the position originally presented.

Some of the changes brought about in the industrial sector by the growth of certain services are the following:

• The increase in consumption of durable goods —automobiles and home appliances— leads to a growth in financing, marketing, maintenance and advertising services, and the jobs generated in these activities rapidly overtake those required in the production stage (Cohen and Zysman, 1987).

• The decline in the profitability of the industrial sector which began in the late 1970s explains why resources were channelled to services associated with paper enterprises (paper entrepreneurialism), with the resulting growth of intermediation in the areas of marketing, finance, legal counsel and real estate (Reich, 1983). A recovery of the return rate would tend to modify the proportions observed during the crisis period.

• The displacement of competition from prices to product differentiation promotes advertising and marketing services.

• Technical progress in the industrial sector leads to a reduction of working hours, which in turn calls for less and less physical effort, both at the work place and in housekeeping. (At the beginning of the century, annual per capita working hours were estimated at 140 000; to date, this figure has probably been reduced to 72 000.) Consequently, there has

been an increase in the demand for leisure services, which include the consumption of goods and equipment of an industrial type (television sets, sporting goods, tourist facilities, etc.) (Shigetsu, 1983). The United States' leadership in the recreation industry is a factor which is vital in assessing its future place in the international economy (Daedalus, 1982).

• The intensification of national and international competition encourages specialization in activities involving the production of goods and of services that have previously been incorporated into the companies, which then become independent entrepreneurial activities, such as computer services, engineering firms, financial management, etc. (Cohen and Zysman, 1987).

• The internationalization of industrial activity encourages the internationalization of related service units, which explains why it is precisely those countries that are involved in the most service activities abroad which are the most enthusiastic promoters of the liberalization of the international trade in services (Cohen and Zysman, 1987).

• The systematic expansion of the public sector in the industrialized economies, as the result of a complex process involving a combination of requirements for legitimation and accumulation inherent in industrialization and urbanization, is reflected in the growth of certain public services, such as education and health; moreover, as a result of increasing regulation, a wide range of consultant services is created to support enterprises in their efforts to optimize their relation with the State.

It may be concluded from the above that there is no magical relationship between increased income and demand for services; on the other hand, there is an economic and social transformation in which changes take place simultaneously in the industrial sector and in a great variety of services related to it, through different relations, but all of a complementary nature (Stanbaek *et al.*, 1982).

A major proportion of the increase in employment in the services sector occurs in activities —the retail trade, health and education— that have a low and stationary level of productivity (Reich, 1983). In these activities, prices have risen much more rapidly than in industrial activities, because of the slow increase in productivity. Thus they have become a considerable source of inflationary pressure and a factor which partly explains the lower growth rate of overall productivity (Stanbaek *et al.*, 1982).

In the health sector, mentioned as one of the clearest examples of the relationship between increased income and demand for services, prices have risen at such a pace (particularly in the United States, but also in other industrialized countries) that there is a growing awareness of the urgent need for institutional and regulatory reforms aimed at increasing productivity and checking price increases (U.S. Department of Commerce, 1984).

In general, it should be noted that in service activities of low and stationary productivity, industrialization is at the initial stage, and thus equipment and production processes are industrially oriented. This may be seen clearly in marketing, health and training, and even in such tertiary activities as hairdressing and psychiatric clinics (Drucker, 1984; Egdahl, 1984).

As long as industrialization of low-productivity services involves more and more computerization, these activities will not contribute much towards increasing employment. Services in which productivity is high, such as communications, financial services or wholesale trade, are characterized by a high degree of industrialization, much lower employment and a lower growth rate than low-productivity services (U.S. Department of Commerce, 1984).

From the standpoint of supply, the basic factor which explains the data-processing revolution has been the rapid technological innovation experienced during the 1970s in branches such as microelectronics, telecommunications and computerization. This explains the sharp drop in the cost of transmitting, processing, storing and reproducing information. In other words, the technical progress generated in some branches of industry is what gives rise to the simple and appealing idea that in future, information will replace capital and labour as basic factors of production. It is no coincidence that the communications sector is the most industrialized of all services. Indeed, if leadership is considered to be characterized by a combination of the following indicators: growth rate of production, of employment and of productivity, level of productivity and reduction of relative prices, the only production sector which has more favourable levels than the overall economy simultaneously in those five indicators is precisely the communications sector.

In the manufacturing sector, the privileged position of the communications sector is shared by activities involving the production of hardware for the so-called data-processing technologies, i.e., microelectronics, computers and telecommunications. Consequently, if one were to try to identify the sector which appears to be the most dynamic, one would find it in the nucleus of industries pertaining to the production of data-processing equipment and services pertaining to the transmission, processing and dissemination of information. From these sectors, technical change is disseminated —at different rates and in different ways— overall to the production of goods and services. Leadership is exercised by data-processing as a whole, which includes a symbiotic combination of hardware and software.

The international competitiveness of countries and their long-term prospects in the world economy still depend on the efficiency of the industrial sectors, which generate the technical progress that spreads to other activities, influencing their productivity levels. During a recession,

a country may face the unemployment problem by expanding services that are not vulnerable to international competition, an option in which Latin America has a great deal of experience; over the medium and long terms, however, the problem of international participation still depends on the competitiveness of industry and of the industrialized services related to it.

The above shows the importance of including in a medium- and long-term analysis of the new industrialization those changes which are taking place within the industrial sector, the increasing complementarity of the industrial and services sectors, the trend towards industrialization of activities previously classified as tertiary, the appearance of a leadership exercised by data-processing, with its hardware and software articulated around the axis of communications, and the resulting importance of a competitive manufacturing sector in shaping Latin America's participation in the international economy.

A preliminary idea of the role played by this displacement of industrial employment to the services sector can be obtained by grouping the production structure according to its sectors, taking together the production of goods and the services with which these goods are directly related. Thus, table 19 shows the evolution of employment in 1972, 1977 and 1984, in those subsystems for which the available information establishes a link between products, inputs, machinery and services. The evolution of employment is analysed within each of the following subsystems: agriculture and food, clothing, housing, automobiles, health, recreation and communication. Despite the obvious limitations, as regards methodology and information, and the very simplified nature of the exercise, the following conclusions may be drawn:

- High-technology and traditional components are to be found both in the production of industrial goods and in services.
- In some of the systems studied, the decline of industrial employment may be explained mainly by the lower industrial competitiveness of the United States (clothing, automobiles and recreation).
- In several of the systems, the increase of employment in services is associated with low levels of skills and wages (food and clothing); in other cases, rapidly expanding services have high wage levels (housing, health and communications).
- In terms of employment, the machinery and equipment component used in the different systems is low; this does not mean that its essential role as the bearer of technical progress should be forgotten. In sectors in which the United States are competitive at the international level, the highest growth rates of employment are to be found in the machinery and equipment component, i.e., goods (health, communications).

• The most dynamic system is communications, which brings together modern goods and services that reflect the transition towards a technology pattern in which the cost of storing, processing and transmitting information is falling sharply, thus favouring dissemination throughout the production system as a whole.

• This analysis of the relationship between goods and services, in terms of the production systems which comprise them, seems to be useful, and confirms the need to study this relationship very carefully.

There are also services in which hourly wages are high, as in the housing sector, which includes firms engaged in promotion, savings and investment, and advertising associated with real estate. The growth rate of employment in this sector during the period 1977-1984 was one of the highest in the economy; the same is true of the communications sector, where employment increased in all categories of production (printing, advertising, machinery and printing and communication equipment) and in the related services. Some of the goods-producing sectors in which employment is growing most rapidly are equipment for the health sector and for communications, where the rates are almost four times higher than the growth of overall employment in the economy for the same period and which are not surpassed by other service activities.

b) ***Other explanations on the evolution of productivity***

Some of the hypotheses that have been put forth recently to explain the decline of productivity in the United States have been short-lived, as they could not be supported empirically. For example, it was frequently argued that high tax rates had caused the drop in productivity; it has been shown, however, that taxes were much higher between 1950 and 1960, when the growth of productivity was also substantially higher.

Likewise, the drop in productivity has been attributed to a higher investment rate, but no mention is made of the fact that what is important is not only the overall rate —which is higher now than it was during previous periods when productivity was rising rapidly— but that its composition is even more important. At present, the investment rate covers a high proportion of office equipment, symbolizing the adoption of modern practices in the production sector, and that increase has not brought with it any increase in the productivity of the activity concerned. In recent years, the use of executives and executive assistants has grown much more than overall employment and much more than the production and investment in those sectors. All this seems to indicate that, despite the high degree of technical progress involved, this furnishing of offices does not raise the productivity of the system in which it is adopted, and that productivity has to do not only with the amount of capital available per worker, but also with the nature of the organization con-

cerned, with interpersonal relations, with levels of communication and with incentives. Productivity does not increase automatically with the adoption of modern equipment.

One important school of thought, having diagnosed the serious implications of reduced productivity and the imperative need to promote technical progress, blames excessive government activity for this phenomenon. According to this line of thinking the fiscal deficit leads to high interest rates, which increase the cost of capital and cause heavy taxation; it is suggested that the remedy for this is to increase incentives for investment in technological development, reduce bureaucracy and coun-

Table 19

UNITED STATES: GOODS AND SERVICES INTEGRATED PRODUCTION SYSTEMS

	1972		1977		1984		Employment growth rate 1977-1984	Salary per hour 1984 (dollars)
	Employment							
	Thousands	Structure (%)	Thousands	Structure (%)	Thousands	Structure (%)		
Food System (F.S.)								
Agriculture and food	11 190	100	12 306	100	12 953	100	0.7	
Agriculture	4 373	39.1	4 170	33.9	3 389	26.2	-2.9	
Input (fertilizers and others)[a]	180	1.6	175	1.4	143	1.1	-2.9	12.86
Machinery[b]	137	1.2	168	1.4	114	0.9	-5.3	10.57
Food[c]	1 835	16.4	1 742	14.1	1 692	13.0	-0.4	8.92
Services[d]	4 665	41.7	6 051	49.2	7 615	58.8	3.3	4.09
Clothing System (C.S.)								
Clothing	3 530	100	3 441	100	3 202	100	-1.0	
Clothing[e]	2 713	76.9	2 551	74.1	2 228	69.6	-1.9	5.89
Machinery[f]	33	0.9	26	0.8	19	0.6	-4.4	8.34
Services[g]	784	22.2	864	25.1	955	29.8	1.4	4.86
Housing System (Ho.S.)								
Housing	7 308	100	7 900	100	8 816	100	1.6	
New constructions[h]	5 279	72.2	5 612	71.0	6 200	70.3	1.4	11.90
Construction								
Materials[i]	493	6.7	484	6.1	484	5.5	1.0	10.29
Equipment[j]	566	7.8	547	6.9	476	5.4	-2.0	7.57
Construction Machinery[k]	134	1.8	155	2.0	95	1.0	-6.8	13.25
Services[l]	836	11.5	1 102	14.0	1 561	17.7	5.1	11.50
Automotive System (A.S.)								
Automobile	2 243	100	2 441	100	2 332	100	0.7	
Motor vehicles and parts[m]	1 050	46.8	1 133	46.4	971	41.7	-2.2	13.91
Services[n]	1 193	53.2	1 308	53.6	1 361	58.3	0.6	...

Table 19 (concluded)

	1972		1977		1984		Employment growth rate 1977-1984	Salary per hour 1984 (dollars)
	Employment							
	Thousands	Structure (%)	Thousands	Structure (%)	Thousands	Structure (%)		
Health System (He.S.)								
Health	4 664	100	5 444	100	6 588	100	2.8	
Drugs[o]	242	5.2	268	4.9	298	4.5	1.5	9.17
Equipment[p]	103	2.2	145	2.7	217	3.3	6.0	8.14
Services[q]	4 319	92.6	5 031	92.4	6 073	92.2	2.7	...
Recreation System (R.S.)								
Recreation	4 381	100	6 126	100	7 249	100	2.4	
Equipment and materials[r]	275	6.3	270	4.4	239	3.3	-1.8	6.97
Services[s]	4 106	93.7	5 856	95.6	7 010	96.7	2.6	...
Communication System (C.S.)								
Communication	3 413	100	3 627	100	4 823	100	4.2	
Printing and publishing[t]	957	28.0	993	27.4	1 265	26.2	3.5	9.24
Advertising[u]	121	3.6	131	3.6	176	3.6	4.2	...
Machinery and equipment[v]	1 079	31.6	1 167	32.2	1 714	35.6	5.6	9.44
Services[w]	1 256	36.8	1 336	36.8	1 668	34.6	3.2	

Source: Joint ECLAC/UNIDO Industry and Technology Division, based on data from U.S. Industrial Outlook 1985, Washington D.C., January 1985.

[a]Includes SIC (Standard Industrial Classification Manual, 1972), codes: 2873 nitrogenous fertilizers, 2874 phosphatic fertilizers, 2879 agricultural chemicals n.e.s. [b]Includes SIC 3523 farm machinery and equipment and 3551 food products machinery. [c]Includes SIC 2011 and 2013 meat and meat products, 2016 and 2017 poultry and related products, 2032 to 2035 canned products, 2037 and 2038 frozen products, 2021 to 2026 dairy products, 2043 cereal breakfast foods, 2051 bread, cakes and related products, 2052 cookies, 2065 confectionery products, 2082, 2084 and 2085 alcoholic beverages, 2086 non-alcoholic beverages, bottled and canned, 2111 cigarettes, 2131 tobacco, 2121 cigars, 2141 other tobacco products. [d]Includes SIC 5812/13 eating and drinking places. [e]Includes SIC 22 textile mill products, knits, threads, floor covering and miscellaneous textile goods, 2823 and 2824 cellulosic and organic fibers, 23 apparel and other textile products, 3111 leather tanning and finishing, 3151, 3161, 3171, 3172 and 2386 luggage and personal leather goods, 314 footwear, except rubber, and 3021 rubber and plastics footwear. [f]Includes SIC 3552 textile machinery. [g]Includes SIC 56 apparel and accesory stores. [h]Includes SIC 15 private residential and non-residential building construction, public and SIC 1629 heavy construction (mining structures). [i]Includes SIC 3211, flat glass, 3241 cement hydraulic, 3271 concrete block and brick, 3272 concrete products, n.e.c., 3273 ready-mixed concrete, 3261 vitreous plumbing accesories. [j]Includes SIC 251 household furniture, 3651 radio and television receiving sets, 363 household appliances. [k]Includes SIC 3531 construction machinery. [l]Includes SIC 891 engineering and architectural services, 603-612 banks, and savings institutions, and 734 services to buildings. [m]Includes SIC 3711 motor vehicles and car bodies, 3714 motor vehicle parts and accessories, 3465 automotive stampings, 3713 truck and bus bodies, 3715 truck trailers, 3011 tires and inner tubes, 2822 synthetic rubber. [n]Includes SIC 75 auto repair services and garage, 551 new and used car dealers. [o]Includes SIC 283 drugs, 284 soaps, cleaners and toilet goods. [p]Includes SIC 3693 X-ray, apparatus and tubes, 3841-42 surgical and medical instruments, appliances and supplies, 3843 dental equipment and supplies. [q]Includes SIC 80 health and medical services. [r]Includes SIC 3911 jewelry precious metal, 3961 costume jewelry, 3914 silverware and plated ware, 3262 vitreous china food utensils, 3931 musical instruments, 375 motorcycles, bicycles and parts, 3524 lawn and garden equipment, 3949 sporting and athletic goods. [s]Includes SIC 79 amusement and recreation services. [t]Includes SIC 27 printing and publishing, newspapers,periodicals, books, miscellaneous publishing, commercial printing, cards, printing-trade services etc.. [u]Includes SIC 731 advertising. [v]Includes SIC 3661 telephone and telegraph apparatus, 3651 radio and television receiving sets, 3662 radio and television communications equipment, 367 electronic components and accessories, 3555 printing trades machinery, 3579 office machines n.e.c., 3573 electronic computing equipment. [w]Includes SIC 4811 and 4821 telephone and telegraph communication and services, 4832 and 33 radio and television broadcasting and 4899 cable television, 7374 data processing services.

teract the protectionist pressures of other countries with take compensatory measures at the domestic level. In brief, the responsibility for recovering technological dynamism and productivity is said to fall on the public sector, which should adopt a set of measures designed to improve the efficiency of the private sector (Landau and Rosenberg, 1986).

With respect to this position, there are those who have stressed the considerable responsibility of the private sector itself, judging from the strategies followed by some corporations, which have led to a loss of markets in sectors in which the United States was the original innovator; some have chosen the easy expedient of dealing with competition by transferring their facilities abroad; and some have systematically underestimated the decisive role played by public sector purchasing in certain strategic categories in which United States industry was most competitive, such as aeronautics. Moreover, it is also argued that the entrepreneurial sector is partly responsible for the loss of management efficiency, inasmuch as it has placed its attention mainly on the potential for growth through mergers, i.e., through the transfer of assets (so-called paper entrepreneurialism). In November 1986, these criticisms, which usually came from liberal economists, received unexpected support from United States government executives at the highest level, who stressed the enormous responsibility which the entrepreneurial sector must assume for improving its own efficiency.

A third trend stresses the weakness of co-ordination between the public and private sectors and the lack of institutional mechanisms for joining efforts and channelling resources to priority sectors. There is ample consensus on this, although the question remains as to whether it is possible to evolve from this decentralized system, which seems to be the basis of United States strength, towards a system geared towards reaching agreement between the different sectors and subordinating special interests to strategic national interests, the possible definition of which is seriously questioned.

It is important to recognize the difficulty of defining responsibilities and assigning them to certain social or institutional factors, especially if one agrees that there is a certain mimesis in the operation of society, i.e., that there are certain basic types of operation and behaviour which can perfectly well be disseminated throughout the public and private, entrepreneurial, trade-union and even academic sectors. In this regard, a somewhat different, or complementary, argument might be advanced, i.e., that the deterioration of United States industrial competitiveness might be explained in part by what might be called the "rent of hegemony" which that country has enjoyed for the past 40 years. This is reflected, in practice, in the fact that the language of that country has become the universal language; its currency is the universal currency, and its lifestyle is the paradigm for the rest of the world. This situation seems

to have generated a series of "rents" which have led to discouragement in the face of the most difficult of all tasks, that of maintaining high competitiveness in the industrial sector which is the bearer of technical progress.

With a large domestic market that is prosperous and integrated, is well linked physically and has a good communications infrastructure, the country seemed to think that its domestic market was more than adequate for any economic activity and moreover, that it was entitled to receive royalties just for the fact of being on top of the world, either as regards the ownership of industry, the design of products or processes, the dissemination abroad of its lifestyle and behaviour, or for having gradually become an international financial centre which inspired trust both because of its economic soundness and because of its military or ideological importance, even during a period of strong and growing external and fiscal deficit.

The capitals of the rest of the world flock to the United States in search not only of high profits but also of prestige and security. All this seems to have created among the élite the same attitude that prevailed in England at the end of the nineteenth century when, in view of the relative and systematic decadence of that country with respect to Germany in what were then the high-technology sectors (chemicals and electricity), it was argued that the phenomenon was not serious, since England played the central role in financial intermediation, services, insurance and transport, and had a vast network of foreign investments which enabled it to continue providing resources to the metropolis.

What is concerned, in this case, is not the rent generated by natural resources, which leads to a behaviour, on the part of the élite, which spreads to society as a whole, leading it to abandon the systematic effort to enjoy the rent provided by nature, but rather a *rentier* attitude which stems from being at the top of the world. This enables the country, for example, to incur its debts in its own currency, to ensure that any increase in the value of the currency is compatible with a high and growing external and fiscal deficit, and to recommend to the rest of the world economic austerity measures which are not consistent with its own domestic policies. Contrary to what happened in England, the significant attenuating circumstance at present is the fact that no other power has the capacity to displace the United States as the centre of the world. The risk of losing its leadership seems remote, so that proposals have been put forth for dealing with the problem through very simple and appealing mechanisms, which, however, are not necessarily very sure.

There are those who hold that, in view of this marked contrast between the United States and Japan, the United States should adopt measures similar to those used by Japan, in the sphere of savings, in the selection of sectoral priorities, in the capacity to generate a public stra-

tegy and in intrafirm relations, strengthening the educational system which has also suffered serious deterioration, and eventually converting the Department of Commerce into the equivalent of a MITI.

Another position, which seems to be less difficult and more convenient for the United States, is the one according to which the Federal Republic of Germany and Japan, especially the latter, would be asked to abandon their policies of austerity and competitiveness and consequently their dynamism, speeding up their entry into the era of affluent consumption and expanded social security systems, so as to allow for a definite improvement in the United States' external situation. There is no evidence that the societies of Japan and Germany, which are fully aware of their traumas and their weaknesses, might be willing to adopt a lifestyle which even the United States can no longer afford.

There seems to be a third option which may be worth exploring; it has the advantage of taking into account the interests of the rest of the world, not only of these three major powers. This is the idea that the United States should decide that it can no longer afford its lifestyle, and that it has to move towards austerity and international competitiveness. The surplus resources of Japan and the Federal Republic of Germany, instead of being transferred to the United States to purchase factories and achieve a level of production that would eventually have to be held back from export as a result of increased domestic protectionism, would be channelled to the third world countries, which in turn would have to make certain internal changes. This could lead to the reconstruction of an international community in which the growth of third countries, both developed and developing, could be revitalized as a result of the channelling of Japanese and West German surpluses and of the internal reorganization of the United States in a manner consistent with its true potential.

There is no evidence that this idea is more realistic than the idea of imposing Japanese fashions on United States citizens or vice versa, but it is worth considering, even if only because it bears in mind the actual shortcomings of the United States and of third countries. The first proposal, the Japanization of the United States, would have to deal not only with internal obstacles but also with the far-from-trivial problem of access to external markets of a reasonable size. The second option, the United States-ization of Japan and the Federal Republic of Germany, would soon lead to stagnation in the three countries, and consequently to a deeper recession in the rest of the world. The third possibility, which is undoubtedly the most complex and hence the least appealing, has the advantage of acknowledging, or at least trying to draw attention to, the fact that it is difficult to imagine that three-fourths of the world population would stand by passively to watch a show which for these three protagonists might have different scripts, but which leaves them out not only of the present, but of the future as well.

V. CONTRASTS AND SIMILARITIES BETWEEN WESTERN EUROPEAN COUNTRIES

1. Introduction

In this chapter, we shall discuss the effect which the availability of natural resources has on the international participation and the specialization and competitiveness of the industrial sector, and we shall explore the relationship between competitiveness, consumption patterns and the objectives of growth and equity. As in the preceding chapter, we shall deal with this question empirically; hence, we shall first discuss briefly and schematically our main findings. Attention is centered on the largest countries of Western Europe (Federal Republic of Germany, United Kingdom, France and Italy) and on the North European countries (Sweden, Norway, Denmark and Finland).

2. The largest countries of Western Europe

Although in the preceding chapter we compared the Federal Republic of Germany with the United States and Japan, we shall now consider it as the reference point for a discussion of the situation of Europe, which is its natural sphere of influence. In the first place, we shall discuss the international participation of these countries, specifying the type of economic activity concerned, and then we shall study the composition of the industrial system and its international competitiveness. Finally, we shall explore the linkages between the industrialization pattern, expressed in terms of international competitiveness, consumption patterns and the permanent objectives of growth and equity.

a) *The South is rising up in the North*

In France, Italy, the United Kingdom, the Federal Republic of Germany and Sweden, taken as a whole, there is a marked disparity as regards their participation on the international market by type of resources and sector of production (table 20). In both the Federal Republic of

Table 20

SOME EUROPEAN COUNTRIES: TRADE BALANCE BY SECTORS OF ECONOMIC ACTIVITY, 1970-1986

(Millions of dollars)

Sectors and countries	1970	1975	1981	1982	1983	1984	1985	1986
Agriculture								
France	-741	78	2 780	1 289	1 975	2 182	2 783	2 965
Federal Republic of Germany	-5 774	-10 145	-13 441	-12 852	-12 868	-15 568	-12 644	-15 266
Italy	-3 008	-6 662	-9 525	-10 340	-10 048	10 285	-11 415	-12 956
Sweden	274	819	656	669	1 021	1 141	808	386
United Kingdom	-5 498	-9 074	-9 415	-9 127	-8 783	-9 203	-8 661	-10 090
Manufacturing industry[a]								
France	2 037	9 817	9 660	4 154	7 035	9 584	-8 040	2 284
Federal Republic of Germany	14 424	39 338	62 317	68 174	59 013	60 235	68 131	89 902
Italy	4 069	13 849	24 987	25 197	28 388	25 248	26 219	30 039
Sweden	270	1 376	4 774	3 993	4 527	5 200	4 943	6 506
United Kingdom	5 968	9 295	6 485	650	-7 114	-8 060	-6 515	-11 708
Energy								
France	-1 915	-10 850	-29 983	-27 225	-22 339	-21 572	-20 231	-12 953
Federal Republic of Germany	1 615	-10 286	-32 723	-29 867	-26 694	-25 545	-26 212	-17 971
Italy	-1 426	-8 227	-26 072	-22 252	-20 749	-19 955	-20 220	-14 696
Sweden	-682	-2 838	-5 870	-5 310	-4 256	-3 465	-3 916	-2 436
United Kingdom	-1 774	-7 733	5 001	6 659	9 149	6 658	8 065	3 325

Table 20 (concluded)

Sectors and countries	1970	1975	1981	1982	1983	1984	1985	1986
Mining								
France	-745	1 432	-1 732	-1 609	-1 161	-1 015	-1 120	-1 514
Federal Republic of Germany	-2 343	-2 662	-3 835	-3 651	-3 231	-571	-3 319	-3 331
Italy	-1 365	-2 074	-3 106	-2 820	-2 609	3 087	-3 056	-3 165
Sweden	-94	-44	-31	-146	-41	-20	-53	8
United Kingdom	-1 431	-1 640	-2 087	-1 620	-2 034	-1 553	-1 698	-1 365
Other sectors								
France	180	385	-112	385	335	398	410	350
Federal Republic of Germany	-318	-431	-176	-712	375	171	484	-775
Italy	1	11	-2 082	-2 568	-2 667	-2 877	-3 532	-3 734
Sweden	9	54	213	44	89	130	137	249
United Kingdom	362	-294	384	662	270	572	711	289
Total								
France	-1 184	-2 002	-19 387	-23 006	-14 155	-10 423	-10 118	-8 872
Federal Republic of Germany	4 375	15 814	12 142	21 092	16 595	18 722	25 472	52 559
Italy	-1 729	-3 103	-15 798	-12 783	-7 685	-10 956	-12 004	-4 512
Sweden	-223	-633	-258	-748	1 340	2 986	1 919	4 713
United Kingdom	-2 373	-9 446	374	-2 776	-8 512	-11 586	-8 098	-19 549

Source: Joint ECLAC/UNIDO Industry and Technology Division, based on United Nations, *International Trade Statistics Yearbook* and *Commodity Trade Statistics*, several years.

[a]Manufacturing industry includes SITC sections 5-8, except division 68 (non-ferrous metals).

Germany and Italy, the basic source of international trade is the manufacturing sector, which enables them to generate foreign exchange so as to compensate, in different degrees as the case may be, for their deficits in the sectors associated with natural resources. A second case is that of the United Kingdom, which since 1975 has had a profile that is characteristic of oil-producing countries. Paradoxically, the country in which the industrial revolution began has come, about two centuries later, to a situation where it has a strong deficit in that sector, and thus is a unique case among the countries studied. The third group is made up of France and Sweden, where a large surplus in the agricultural sector coexists with a relatively high surplus in the manufacturing sector.

The Federal Republic of Germany and Italy follow Japan as the three countries with the highest manufacturing surplus in the world; the difference between the two lies in the fact that the Federal Republic of Germany generates such a large surplus that it is more than able to compensate for the deficit in the other natural resources sectors. Thus, it has had a high and sustained trade surplus over the last 15 years which places it next to Japan among the countries with the highest capacity to generate trade surpluses in the world. Italy, despite its dramatic success in the manufacturing sector, is not able with this activity to cover its natural resources deficit, and hence it has a trade deficit comparable to that of France and the United Kingdom. Both countries —the Federal Republic of Germany and Italy— held up well under the oil crisis of 1973, generating a manufacturing surplus which in Germany more than compensated for the energy deficit, and in Italy covered 70% of it. Between 1975 and 1981, the Federal Republic of Germany's oil deficit amounted to US$20 billion more and Italy's was US$17 billion, compared with manufacturing surpluses of US$22 billion for the Federal Republic of Germany and US$11 billion for Italy.

The United Kingdom, whose 1970 surplus was only surpassed by that of the Federal Republic of Germany, saw its relative standing with respect to France and Italy decline between 1970 and 1975, but the situation was further aggravated when it began to have access to the oil resources of the Northern Sea. Between 1975 and 1984, the United Kingdom, after having had a surplus of US$9 billion, acquired a deficit of US$8 billion; in other words, it lost US$17 billion in the manufacturing sector which could not be offset by the nearly US$15 billion more that were generated in the energy sector. This was also the case with the oil-producing countries of Latin America and, to a lesser degree, with Norway. Around 1984, the United Kingdom's manufacturing deficit was of the same order of magnitude as the manufacturing deficits of all the Latin American oil-exporting countries (US$10 billion) for the same year. This sharp drop in the United Kingdom's manufacturing sector reinforced a longstanding trend. It also confirmed the hypothesis, set

forth in the preceding chapters, that when a country has a relatively easy means of generating foreign exchange which does not make it necessary to put a strain on overall society —as is the case with efforts to promote industrial competitiveness—, any country, regardless of its level of development and its previous history, will choose the path of least resistance, i.e., the rent offered by the natural resource petroleum.

In France and Sweden, a significant surplus in the manufacturing sector went hand-in-hand with a sustained but lower surplus of the agricultural sector, but the two countries differed as regards their capacity to respond to the oil crisis. In France, the crisis was a profound one, and entailed an expenditure increase of almost US$19 billion; the manufacturing sector in that country was hardly able to contribute anything to offset that expenditure, and only the agriculture sector increased its surplus by US$3 billion. From that moment on, the deficit began to take on the characteristics of a structural phenomenon, although it was moderated during the 1980s, mainly as a result of a decrease in oil expenditures. In Sweden, on the other hand, the increased expenditure for oil —approximately US$3 billion between 1975 and 1981— was offset, as in the Federal Republic of Germany and Italy, by a larger surplus of the manufacturing sector. This helps explain why, in the following years, Sweden had an almost balanced trade, with a considerable and growing surplus during the 1980s.

All five countries had a high degree of exposure to international trade: if one considers the total amount of exports and imports in terms of the product, one can see that the ratio is higher than 40%, and even 60% in the case of Sweden. In the second place, these countries have in common the fact that the public sector plays a major role in the economy; around the early 1980s, the ratio of tax revenues to the product was over 40% in all of them, almost 60% in Sweden (OECD, 1985-1986). Except in the case of the United Kingdom, energy imports represented up to 6% of the product, in the early 1980s. In brief, these countries are strongly involved in international trade, their public sectors play a major role in economic activity, and they have a significant energy problem, but their participation in international trade, from the standpoint of sectors of activity, is relatively heterogeneous.

b) ***Are all societies open and flexible?***

It is interesting to compare the changes that have taken place in the structure of the industrial sector over the last 20 years. Beginning with the Federal Republic of Germany —already discussed in the preceding chapter—, it is interesting to note the improvement in the prevailing pattern of leadership in chemicals and electronics, with a slight change: specialization in regard to wood and paper and non-ferrous metals.

Contrary to what happened in the Federal Republic of Germany and in the United States and Japan, where chemicals and electronics are dominant and establish a profile of a high degree of specialization, Italy (figure XIII), in addition to making significant strides in these high-technology branches, managed to maintain its international participation by raising the level of excellence in sectors which, from the standpoint of common sense as well as from the theoretical standpoint —which does not happen often— appeared to be doomed to taking a back seat, as a result of the increasing competition from the recently industrialized Asian countries. Thus, textiles, clothing and footwear, which in the other industrialized countries suffered a process of rapid deindustrialization, remained highly dynamic and productive in Italy, thus enabling it to maintain a sound position in international trade, not only in the European Common Market, but also in the United States.

Moreover, in Italy, the non-electrical machinery and transport equipment sectors received the same attention as electrical equipment and categories related to a natural resource, such as wood and paper. The structural change of the Italian industrial sector seems to be different from the cases discussed in the preceding chapter, inasmuch as it has great dynamism in a wide variety of sectors: some of them are labour-intensive and others capital-intensive, such as the steel industry, or involve technical progress, such as machinery and transport equipment, and even some that have to do with natural resources, such as wood and paper. The only category in which there appears to be deindustrialization at the close of the 1980s is that of metal products.

Small and medium-scale industry plays a more important role in Italy than in most of the other European countries considered, especially in comparison with the Federal Republic of Germany, Sweden and the United Kingdom, but also France, although the difference is not so great. During the 1970s, the productivity of small and medium-scale Italian firms tended to increase and to be standardized with large firms, in a wide variety of sectors.

This contradicts the traditional idea that there are structural differences in productivity associated with economies of scale and technological rigidities in a relatively large number of industrial sectors. Moreover, this increase in the productivity of small and medium-scale enterprises enables them to play a significant role in the international trade of that country, in several sectors, e.g., textiles, clothing, footwear, wood furniture, and also in certain types of machinery in which economies of scale are not significant (special-purpose machinery, especially in the food industry). These two features also make the Italian case interesting, because of the options that seem to be opening up for Latin America, although this does not mean it should be set up as a paradigm.

Figure XIII

FRANCE, FEDERAL REPUBLIC OF GERMANY, ITALY, SWEDEN AND UNITED KINGDOM: INDUSTRIAL STRUCTURAL CHANGES, 1970-1987

FRANCE

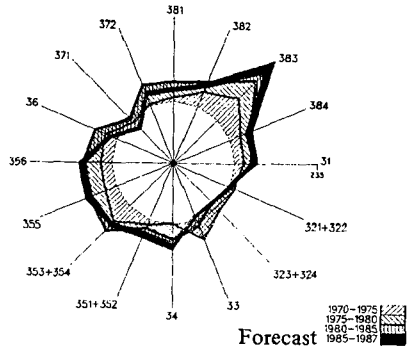

FEDERAL REPUBLIC OF GERMANY

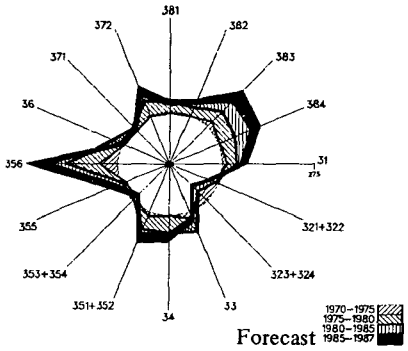

ITALY

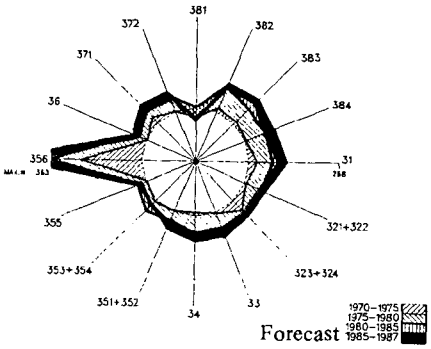

SWEDEN

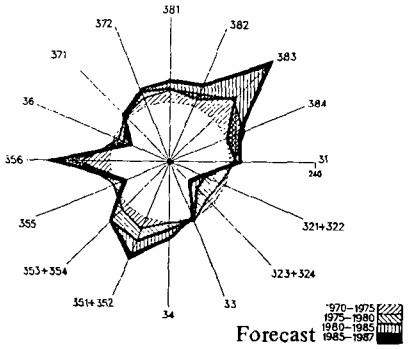

UNITED KINGDOM

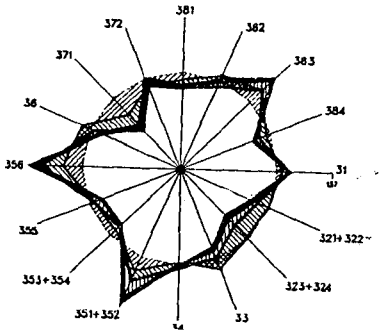

Forecast 1970–1975 1975–1980 1980–1985 1985–1987

Source: UNIDO.

The United Kingdom —the cradle of the Industrial Revolution, which 200 years later has a manufacturing deficit comparable to the deficit of the oil-exporting countries of Latin America— deserves much more attention than can be given to it in this study.

The profile of structural change within the manufacturing sector (see figure XIII, above) shows that a process of deindustrialization occurred in many sectors between 1970 and 1987, i.e., around 1987, the volume of production was considerably lower than in 1970. These include the steel industry, textiles, transport equipment, clothing and leather products.

By contrast with this deindustrialization in sectors which vary considerably as regards the use of labour, capital and technology, the high-technology sectors of that period were petroleum by-products, both industrial chemicals and plastics. This structural change with regard to petroleum by-products, along with deindustrialization in several other sectors, except electrical equipment, which also grew more than the rest, took place within a context of general stagnation; between 1970 and 1987, the industrial sector hardly grew at all, a case which was unique in Europe. During the 1980s, the United Kingdom had one of the highest rates of employment, around 12%, but this was not accompanied by any growth of employment in the services sector (less than 1% between 1975 and 1982).

In France, industrial growth during the period was similar, although somewhat lower than in the Federal Republic of Germany and Italy. The changes in its production profile also place it in a different position than Japan, the Federal Republic of Germany and the United States. Leadership was exercised by the electrical machinery and electronics sector, while at the same time several sectors —some of them labour-intensive, others based on natural resources and others capital-intensive— experienced a process of deindustrialization. This was the case with non-metallic ores, steel, non-ferrous metals, metal products, textiles, leather and wood. Industry grew rapidly, there was a marked structural change, and specialization was centered on electrical equipment and electronics, with the public sector's purchasing power playing an important role (nuclear energy, aeronautics, railway equipment, telecommunications and armaments).

Finally, in the case of Sweden, which will also be discussed in the next section along with the other North European countries, it should be noted that a structural change occurred which was similar to that of the larger countries, with leadership being exercised by chemical by-products and electronics, but with a clear rationalization, even in clothing, textiles and footwear. A characteristic of the transformation of production in Sweden, which is common to all the Scandinavian countries, is the high degree of specialization in categories directly associated with the exploi-

Figure XIV

WESTERN EUROPE: ENGINEERING PRODUCTS
WORLD MARKET SHARE, 1965-1984

(Percentages)

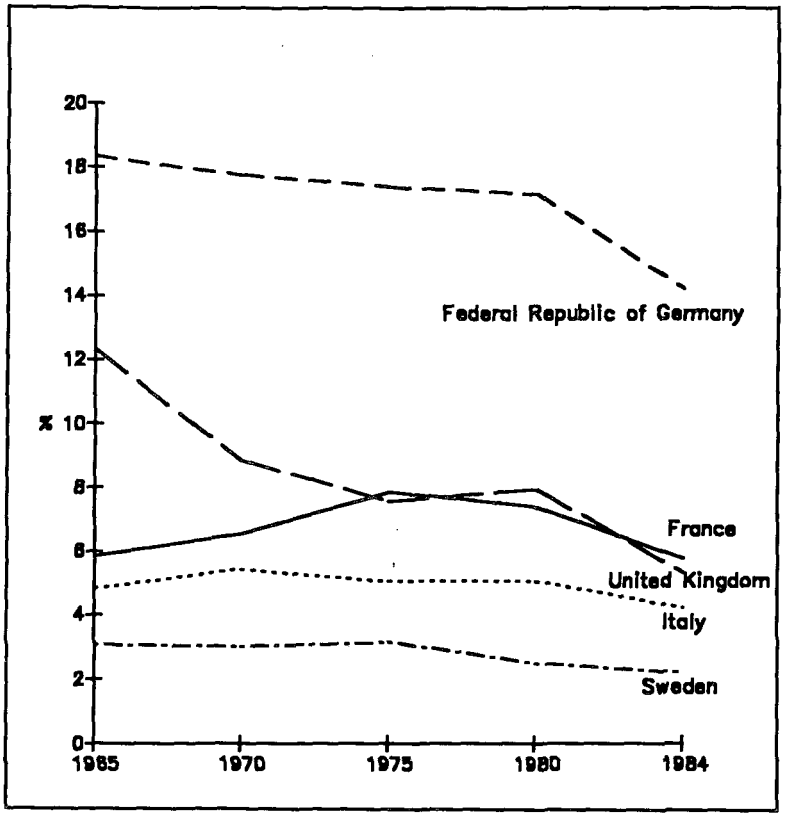

Source: Joint ECLAC/UNIDO Industry and Technology Division.

tation of natural resources, i.e., the industrialization process strengthens the competitiveness of products made with natural resources, in which the country has a natural advantage.

As regards the participation of those countries on the international market, measured by the relative position of capital goods (figure XIV), it is worth noting, first of all, the asymmetry between the place held by the Federal Republic of Germany and that of the other countries. Around 1984, the Federal Republic of Germany's share was equivalent to that of France, the United Kingdom and Italy all together. The participation of the Federal Republic of Germany remained very high (18% of the world

supply of exportable goods) up until 1980, when it began to fall gradually until 1984; the United Kingdom fell steadily during the period 1965-1970, then remained relatively stable until 1980 and again fell steadily from 1980 onwards. The position of France, Sweden and Italy towards the end of the period was similar to the one they had held at the beginning, but they had reached a more favourable position in the early 1970s. Each one represented approximately 6% of the world market around 1984, whereas at the beginning of the period, the United Kingdom's position had been almost twice as high as France's and three times as high as Italy's.

As regards the evolution of competitiveness, measured as the ratio between exports and imports of engineering products (figure XV), the trends reaffirm our previous remarks about participation on the world market: Italy steadily improved its competitiveness, while that of the United Kingdom fell. In 1965, the competitiveness of the United Kingdom was four times as high as that of Italy; at present, it is almost 30% lower than Italy's. The relative competitiveness of the Federal Republic of Germany is more than double and almost triple that of the other countries considered.

Export-import ratio of three achieved by the Federal Republic of Germany shows a high level of competitiveness in a wide range of products. When the ratio is closer to one, there may be strong intrasectoral specialization, with levels of excellence in some categories and net imports in others. A ratio such as that achieved by the Federal Republic of Germany or Japan can only be achieved when the overall base of excellence is very broad.

An analysis of the type of category in which each country has achieved a level of specialization (table 21), comparing its share of the world engineering products market as a whole with the degree of specialization achieved in specific categories, will show some interesting differences. In France, the three categories in which there is a high level of specialization are sectors in which the purchasing power of the public sector plays a decisive role; this is in line with the way industrialization has progressed in that country, which has achieved levels of excellence in sectors related to energy, telecommunications, the military industry, aeronautics and railroad equipment.

In the Federal Republic of Germany, equipment for the industrialization of the country's natural resources, such as pulp and paper-making machinery and related printing machinery, holds a position next to the high-technology sector of nuclear reactors, of which this country supplies almost half the world market. In the former, intellectual and industrial values are added to that of the natural resources concerned.

In Italy, contrary to the two cases mentioned above, the greatest degree of specialization is to be found in durable home appliances, with

Figure XV

WESTERN EUROPE: ENGINEERING PRODUCTS INTERNATIONAL COMPETITIVENESS, 1965-1984

(Export-import ratio, percentages)

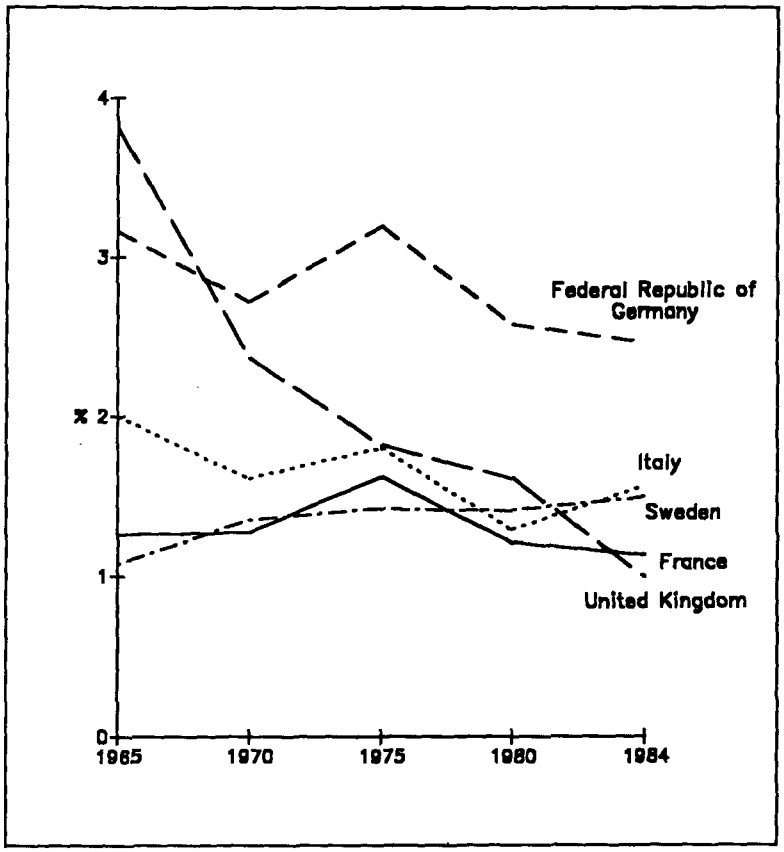

Source: Joint ECLAC/UNIDO Industry and Technology Division.

the fundamental contribution being in design, and non-household refrigeration and tractors belonging to the food system. Italy has also attained a high level of specialization in the processing and design of such equipment.

In Sweden, as in the Federal Republic of Germany, certain high-technology categories, such as telephone and telegraph equipment and nuclear reactors, coexist with pulp and paper-industries machinery, which also is an example of how intellectual value is added to the available natural resources.

Finally, in the United Kingdom also, in at least two of the most highly specialized categories —reaction engines and telecommunications equipment— one finds industries whose expansion and international competitiveness are strongly dependent upon public sector purchasing.

Table 21

WESTERN EUROPE: SPECIALIZATION IN ENGINEERING PRODUCTS, 1984

Countries	Percentage world share total engineering products	SITC Rev.2[a]	Item	Percentage world share (each item)
France	6.0	714.4	Reaction engines	21.0
		722.1	Electrical apparatus for making, breaking, protecting electrical circuits	11.5
		792	Aircraft	11.4
Federal Republic of Germany	14.8	718.7	Nuclear reactors	44.0
		726	Printing bookbinding machinery	33.0
		725	Paper and pulp machinery	27.0
Italy	4.4	775	Domestic equipment, electric and non-electric	14.6
		741.4	Refrigerating equipment (non-domestic)	13.2
		722	Tractors	11.0
Sweden	2.3	764.1	Electric telephone and telegraph equipment	9.5
		718.7	Nuclear reactors	8.0
		725	Paper and pulp machinery	7.0
United Kingdom	5.6	714.4	Reaction engines	44.0
		722	Tractors	15.0
		764.3	Telecommunication transmiters and receivers	14.9

Source: Joint ECLAC/UNIDO Industry and Technology Division, based on data from United Nations, *Bulletin of Statistics on World Trade in Engineering Products*, 1986, United Nations publication, Sales No. E/F/R.88.II.E.14.

[a]United Nations, *Standard International Trade Classification.*, Rev.2, 1975, United Nations publication, Sales No. E.75.XVII.6.

c) *Divergent trends*

The five countries are all highly industrialized, and very open to international trade and in all of them, the State plays a significant role in the economy. The Federal Republic of Germany is the country that has the highest level of overall industrialization, and has more favourable levels of equity and competitiveness than all the countries considered as a whole. It also belongs to the group of the most dynamic countries (higher than 3% GDP per capita growth between 1960 and 1979). This pattern is characterized by the balanced coexistence of dynamism, equity, competitiveness and austerity (figure XVI).

The extreme case would be that of the United Kingdom, which has a high level of equity (almost the same as the Federal Republic of Germany) and austerity, but low levels of dynamism and competitiveness. There seems to be a curious combination of Japan's austerity, Germany's equity and the United States' dynamism and competitiveness.

The other three countries fall between these two polar situations. The highest levels of competitiveness in the industrial sector are to be found in those countries that have a structural deficit of natural resources, i.e., the Federal Republic of Germany and Italy. As regards consumption patterns, Western Europe is quite homogeneous, with the differences in levels of density of vehicles being minimal compared with those observed in the three largest industrial countries of the world; the Federal Republic of Germany has the highest density and the United Kingdom the lowest, but the interval between them is very small.

This is not the case with regard to equity. Two groups of countries may be distinguished: those with a high level of equity, higher on average than the industrialized countries, which would include Sweden, the United Kingdom and the Federal Republic of Germany, and those with lower levels of equity, i.e., France and Italy, whose levels are slightly higher than those of the most equitable countries of Latin America (Argentina and Uruguay). These two countries, however, have the highest levels of dynamism, with GDP per capita annual growth rates of nearly 4% over the past 20 years. Thus, they appear to be a hybrid between the consumption pattern shared by all the countries of the region and the type of income distribution found in the United States, with a pattern of dynamism and international competitiveness more similar to Japan's. They appear to be competitive and dynamic countries that have a high level of consumption, "after the style of the United States", and a relatively low level of equity.

Thus, we have three different patterns: the Federal Republic of Germany and Sweden, which have the same profile, and in which the four dimensions are balanced; the United Kingdom, where the legacy of the industrial past and of world leadership is only reflected in a high degree

of equity, but which has undergone a peculiar process of modernization from the bottom up, with a decline in dynamism and, by the same token, in competitiveness and living standards; and France and Italy, which in the 1950s had a high percentage of the agricultural population (32% and 42%, respectively, in 1950), a factor that seems to have something to do with their less favourable income distribution, but which seems to have experienced, especially in the case of Italy, a high growth rate in productivity and competitiveness.

To what extent is this consistent with the analytical framework described in the preceding chapter?

Figure XVI

WESTERN EUROPE: STRATEGIC PROFILES

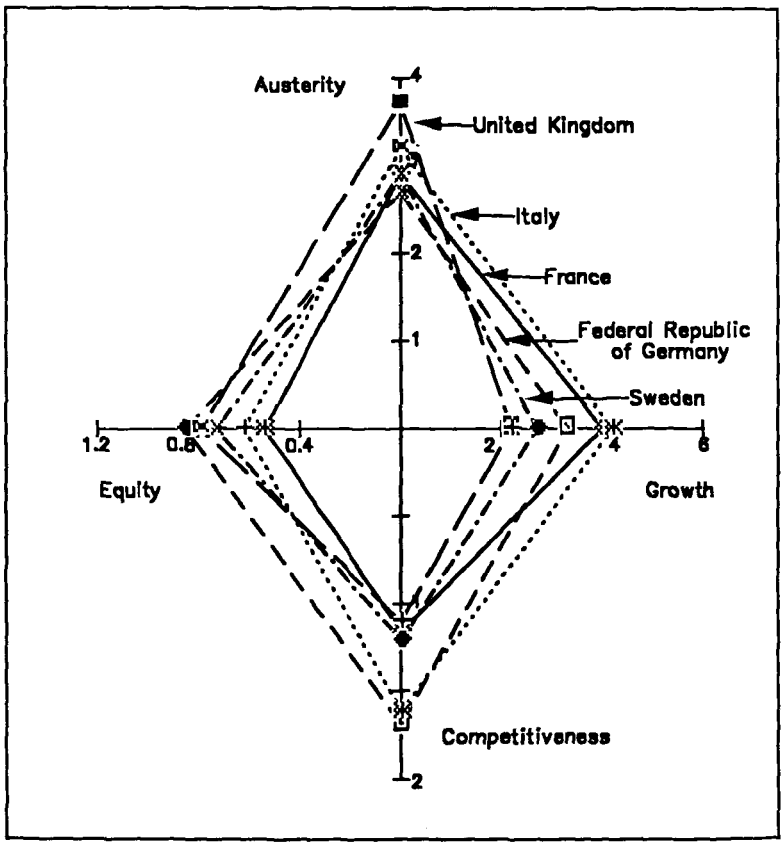

Source: Joint ECLAC/UNIDO Industry and Technology Division.

The cases which would appear, for different reasons, to depart from the framework would be the United Kingdom, France and Italy. Many very thorough studies have been made of the decline in the relative position of the United Kingdom; its access to petroleum resources, by aggravating the deterioration of its industrial competitiveness, has accentuated this longstanding downward trend. In France and Italy, competitiveness and dynamism coexist with a low level of equity and a high level of consumption; this seems to be a situation in which the positive effect envisaged for competitiveness with respect to equity is counteracted by the structural characteristics inherent in a modernization process in which a major role has been played by the agricultural sector, so that the less developed areas coexist with a budding industrial sector. This hybrid between the United States model of consumption and relative inequity with the Japanese component of dynamism and competitiveness will appear again in Latin America, with Brazil being the most notable example.

Within the analytical frame of reference, both the objective of dynamism and the objective of equity appear to be conditioned by several factors other than the competitiveness and consumption patterns mentioned herein. This may explain why, with competitiveness having a positive influence on equity, the structural factors which influence it prevail, creating a situation such as the one described above. The idea of a relationship between equity and consumption patterns according to which a lower level of equity should lead (at a similar income level) to a relatively higher level of austerity and vice versa, holds true in the case of the United Kingdom, on the one hand, and of France and Italy on the other, but is not confirmed by the situation of the Federal Republic of Germany, which has both the highest level of equity and the highest level of consumption. In this case, there is a difference in income levels which may explain the apparent inconsistency (according to the World Bank, in 1986 the GDP per capita had reached US$12 080 in the Federal Republic of Germany, US$8 550 in Italy, US$8 870 in the United Kingdom and US$10 720 in France).

3. The North European countries

a) *Small, open and democratic countries*

This category includes Sweden, Norway, Finland and Denmark. These countries have a small population, comparable to that of the small and medium-sized countries of Latin America, and a high level of income, which is at least five times higher than that of the most prosperous Latin American countries. They all play a strong role in international trade

(exports plus imports amount between 55% and 60% of the gross domestic product); their trade has a substantial component of natural resources, and the public sector plays a major role in the economy. Taxes on the product, including social security contributions, amount to 60% in Sweden and 40% in Finland, which has the lowest rate. Moreover, at the political level, these countries are characterized by a longstanding democratic tradition, a feature which differentiates them from Southeast Asia, another reference point for comparing the Latin American situation.

b) ***Industrial specialization utilizes the potential of a country's natural resources***

All these countries show a sustained surplus in the agricultural sector and, in the case of Norway since the mid-1970s, a strong surplus in the oil sector (table 22). In Finland and Sweden, this agricultural surplus is added to a strong surplus in the industrial sector (in Finland since the early 1980s).

Norway also has a structural surplus in the mining sector: agriculture, energy and mining provide the foundation for its international market position. Between 1975 and 1981, its net foreign exchange income in the energy category rose by almost US$7 billion, but as in the case of the United Kingdom, it suffered a significant decline, equivalent to almost half that increase, in the manufacturing sector. From 1981 on, its manufacturing deficit persisted, but its energy surplus continued to grow; the same was true of the agricultural and mining sectors. Norway is the Scandinavian country which, from the early 1980s on, had the largest overall trade surplus of all the countries taken together and, along with Sweden, it is the European country which has managed to keep its unemployment rates unusually low, at around 3%.

Norway's energy surplus represented around 7% of its product in the early 1980s; the other Scandinavian countries had energy deficits of around 5% or 6% of the product. When the oil crisis of the early 1970s occurred, those countries showed a good capacity to respond, inasmusch as their industrial sector was flexible enough to react to that major upset. The increased expenditure for oil amounted to some US$2 billion in Denmark, somewhat over US$2 billion in Finland, and US$3 billion in Sweden. In these three countries, the industrial sector reacted positively, and partly compensated for that loss. In Denmark, the manufacturing deficit fell by US$1 billion; in Finland, by a little under US$2 billion, and in Sweden, the increased surplus amounted to more than US$3 billion. In Denmark also, the agricultural sector showed a favourable evolution, with an increase of almost US$1 billion. These three small countries, which took part in international trade by relying heavily on their natural

Table 22

NORTH EUROPEAN COUNTRIES: TRADE BALANCE BY SECTORS OF ECONOMIC ACTIVITY, 1970-1986

(Millions of dollars)

Sector and country	1970	1975	1981	1982	1983	1984	1985	1986
Agriculture								
Denmark	664	1 958	3 228	3 322	3 061	2 906	3 137	3 856
Finland	301	152	1 612	767	944	1 147	860	835
Norway	18	-26	122	176	337	263	194	47
Sweden	274	819	656	669	1 201	1 141	808	386
Manufacturing industry[a]								
Denmark	-1 280	-1 865	-956	-1 434	-931	-1 483	-2 153	-4 288
Finland	-297	-705	2 160	2 390	1 746	2 417	2 230	2 313
Norway	-1 256	-2 769	-5 314	-5 738	-4 761	-5 057	-5 549	-9 578
Sweden	270	1 376	4 774	3 993	4 527	5 200	4 943	6 506
Energy								
Denmark	-337	-1 628	-3 714	-3 410	-2 395	-2 213	-2 208	-1 375
Finland	-283	-1 424	-3 775	-3 139	-2 813	-2 365	-2 645	-1 954
Norway	-231	-19	6 785	7 111	8 087	8 908	8 756	6 625
Sweden	-682	-2 838	-5 870	-5 310	-4 256	-3 465	-3 916	-2 436
Mining								
Denmark	-104	-119	-243	-224	-221	-203	-200	-259
Finland	-46	-134	-145	-177	-144	-93	-85	-126
Norway	233	325	732	542	821	918	754	874
Sweden	-94	-44	-31	-146	-41	-20	-53	8
Other sectors								
Denmark	-2	-9	-111	-128	-88	-56	-93	-99
Finland	-6	-	-36	-97	-70	-41	-62	-64
Norway	-9	-9	4	21	-5	-2	-12	-39
Sweden	9	54	213	44	89	130	137	249
Total								
Denmark	-1 099	-1 663	-1 796	-1 874	-574	-1 049	-1 517	-2 170
Finland	331	-2 111	-184	-256	-337	1 065	298	1 004
Norway	- 1245	-2 498	2 329	2 112	4 479	5 030	4 143	-2 071
Sweden	-223	-633	-258	-748	1 340	2 986	1 919	4 713

Source: Joint ECLAC/UNIDO Industry and Technology Division, based on United Nations, *International Trade Statistics Yearbook* and *Commodity Trade Statistics*, several years.

[a]Manufacturing industry defined according to SITC, Rev.2, sections 5 to 8, except division 68.

resources, showed a great capacity to respond to the challenge posed by the rise in oil prices. This capacity has to do, among other factors, with the way these countries have achieved specialization in the structure of production within the industrial sector. Figure XVII shows that the profile of specialization and structural change within the industrial sector, especially in Finland, Denmark and Norway, is very different from that which one sees in the large countries discussed above. In Finland, for example, in addition to the rapid growth of basic chemicals

Figure XVII

DENMARK, FINLAND, NORWAY AND SWEDEN: STRUCTURAL CHANGES IN INDUSTRY, 1970-1987

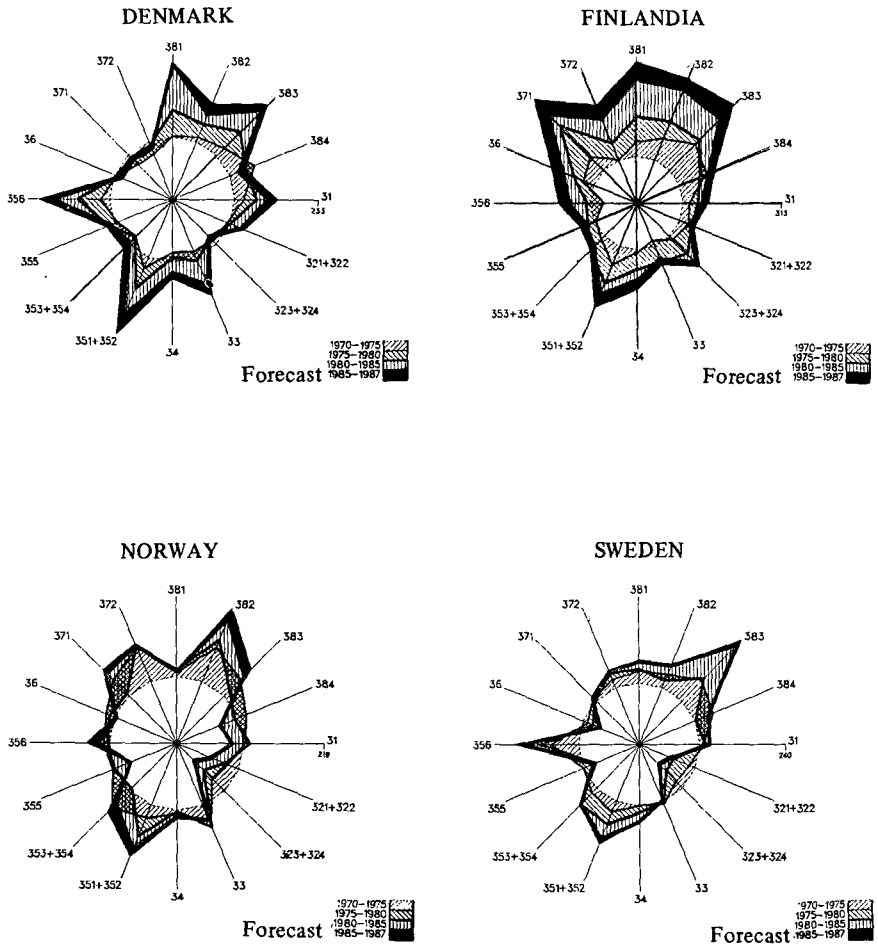

Source: UNIDO.

and electronics, which follow the international pattern, there is significant specialization in branches associated with the country's natural resources, especially steel products, metal products, non-metallic products, non-electrical machinery and leather products. In Denmark, a major role is also played by the three traditional axes, i.e., the food industry, textiles, wood and furniture, and metal products, all linked with the industrialization of natural resources. In Norway, where the availability of oil resources influences industrial growth, there is a strong restructuring which is reflected in the drop in the absolute levels of certain categories which are no longer important, such as electrical machinery, foodstuffs, clothing, textiles, rubber products and non-metal mineral products. There is a strong polarization around petroleum by-products and non-electrical machinery, part of which has to do with oil drilling and the processing of other natural resources. In Sweden, where the basic axes of electrical equipment and petroleum by-products are predominant, there is also a restructuring of industry, as a result of which there has been a drop in certain labour-intensive sectors, such as clothing, textiles, footwear and non-metal mineral products. In these two countries, industrial restructuring is accomplished without accentuating the unemployment problem, which, considering the major role they play in the international market, means that these countries have been very flexible in following the prevailing trend as regards dynamism and technological content, and that their societies attach high priority to the maintenance of high levels of employment.

To evaluate the share of these countries in the world market over the last 20 years (figures XVIII and XIX), an analysis is made of the share held by these countries and of their competitiveness with respect to engineering products. Sweden's position is more or less equivalent to that of the other three countries together. Finland has improved its share systematically over the same period in which the other Scandinavian countries, especially from 1975 on, have seen their market share drop steadily, with this situation becoming especially pronounced in the case of Norway (the oil syndrome between 1975 and 1980). Norway, Finland and Denmark each account for approximately 1% of the supply of engineering products, which is a negligible share, but this does not prevent them from achieving high levels of excellence in certain categories which have enabled them to consolidate their position. Figure XIX shows how Finland and Sweden are raising their competitiveness on the international market, despite the relative loss of participation on the part of Sweden; Denmark and Norway, on the other hand, show a slight but steady decline in competitiveness from 1975 on. The type of product in which these countries specialize shows their ability to add intellectual value to the available natural resources. For example, Finland, whose participation on the world market is lower than

1%, has attained shares of 7% and 6% in categories associated with its natural resources, such as pulp and paper machinery and ships (table 23). Denmark has a share almost five times higher than its overall share, in products associated with the industrialization of its agricultural natural resources, such as industrial refrigeration equipment, food industry equipment and agricultural machinery. Norway specializes in ships, pumping equipment for oil drilling, and agricultural machinery. Finally,

Figure XVIII

NORTH EUROPEAN COUNTRIES: ENGINEERING PRODUCTS WORLD MARKET SHARE, 1965-1984

(Percentages)

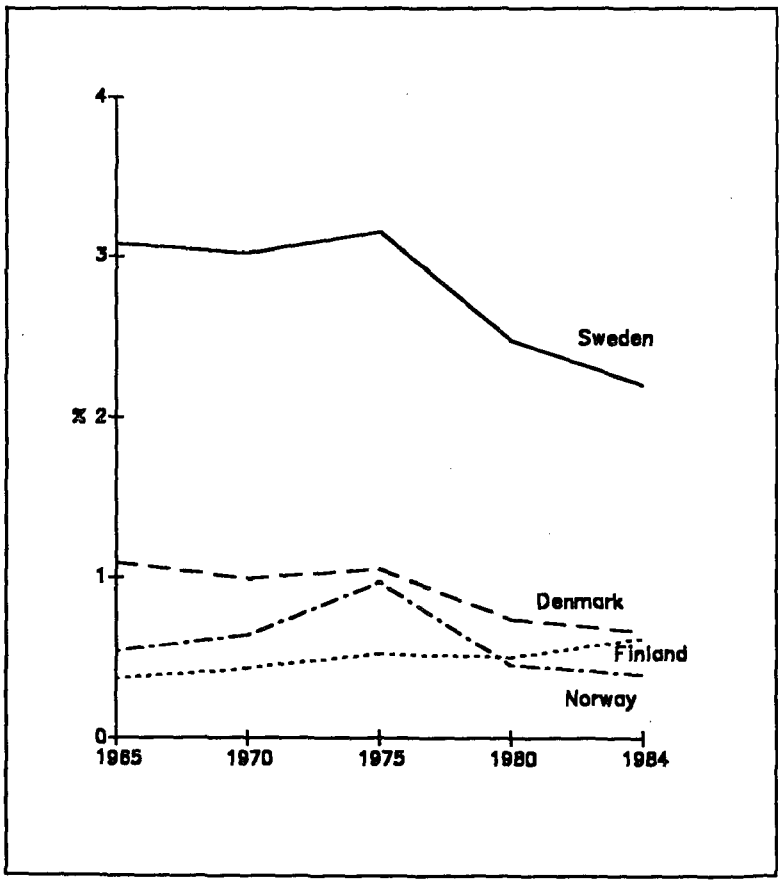

Source: Joint ECLAC/UNIDO Industry and Technology Division.

Figure XIX

NORTH EUROPEAN COUNTRIES: ENGINEERING PRODUCTS INTERNATIONAL COMPETITIVENESS, 1965-1984

(Export-import ratio, percentages)

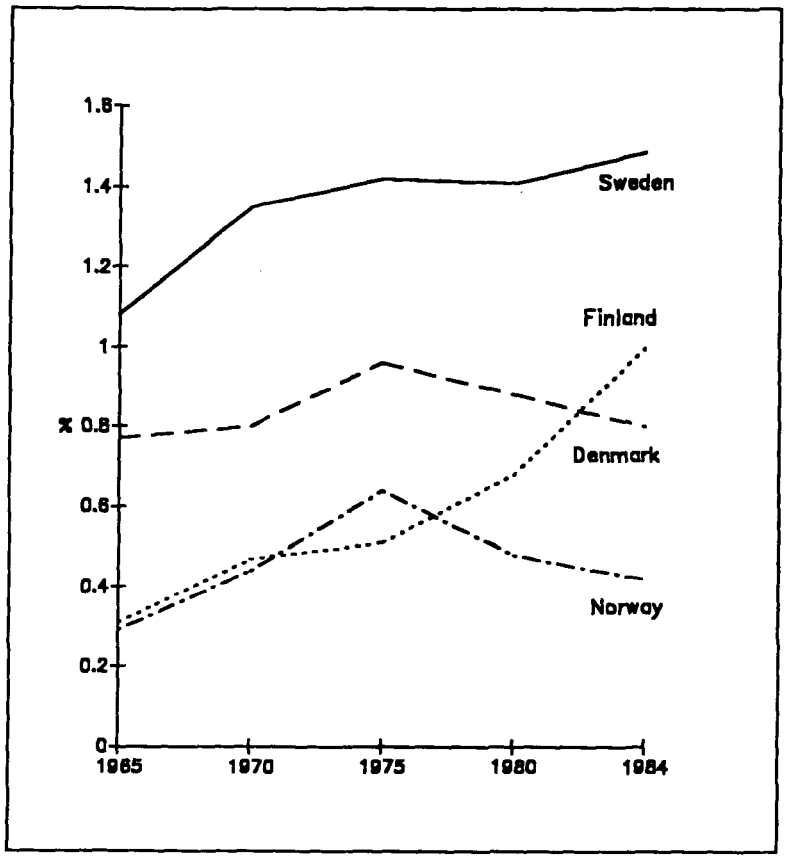

Source: Joint ECLAC/UNIDO Industry and Technology Division.

in Sweden there is a combination of high-technology categories, such as communications equipment and nuclear reactors, with machinery designed to utilize the country's forest resources.

It is interesting to note how this group of countries, with very small markets and a marginal share of the world engineering products market, have managed to enter this market by utilizing their own natural resources, for which they have developed the necessary technological infrastructure, and the products, processes and equipment needed to

level of development is higher (except for Norway, an oil-producing country) than that of the other North European countries (in 1986, GDP per capita was US$13 160 for Sweden, US$12 160 for Finland, and US$12 600 for Denmark); the lowest level of competitiveness was, as might be expected, Norway's. The oil syndrome affected its share of the international industrial market, and it only managed to cover 50% of its industrial imports with exports.

Considering that dynamism has to do not only with competitiveness in the manufacturing sector, but also with the availability of external resources, and that Norway has a large supply of natural resources, to which must be added the rise in oil prices, we find it to be the country with the highest level of growth and per capita income (US$15 400 in 1986). This confirms the idea that growth depends on a whole set of factors; the fact that competitiveness supports growth and that Norway ranks relatively low in competitiveness does not keep it, considering the overall set of factors which influence growth, from having the highest rate, almost identical with that of Finland.

In general, however, the pattern followed by the North European countries is similar to that of the Federal Republic of Germany, insofar as the figures for the four dimensions considered are comparable. Contrary to Japan, which stresses dynamism, competitiveness and austerity, all that is complemented, in this case, by a high level of prosperity; contrary to the case of the United States, that prosperity is not attained at the expense of equity. Behind the pattern of development and industrialization of these countries, we must see the historical process that has led to modernization: they were societies in which agriculture had been highly modernized, and land ownership was distributed in a relatively equitable fashion; this phenomenon went hand-in-hand with ease of access, first to the market of the United Kingdom, and then to the European Common Market. Their share on the international markets was consolidated on the basis of their emphasis on adding value to their natural resources, thus specializing in products in which they can guarantee high levels of quality, specification and design.

This group of countries, which some political scientists have described as corporate democracies —having their political origin in the crisis of the 1930s and the early postwar years, and an economic profile similar to that of the Federal Republic of Germany— have also been analysed in terms of their ability to overcome the crises of the 1970s and the 1980s in better shape than other countries, including the largest European ones. These small northern countries have shown a great openness to international trade, being more radical even than the other industrialized countries in that they have systematically opposed any attempt to place barriers on international trade. This may be explained by their great vulnerability to the international market. At the domestic

level, they have proven to have a high level of economic and social articulation, with the State playing a major role, as reflected in an income policy that has been the subject of studies by the rest of the world.

These countries seem to have reached the sensible conclusion that, because of their size and their vulnerability, they cannot allow themselves the luxury of constant internal turmoil. This belies the idea that there is a necessary complementarity between efficient participation in the international market and reduction of the size of the State. In these countries, a high degree of social agreement, of articulation between the public and the private sectors, and even a strong public influence in domestic matters all coexist with a policy of unrestricted openness to the international market.

4. Leadership in armaments and lag in competitiveness: the great small powers

If our analysis had included the centrally-planned-economy countries, we would have noted that, despite the differences in socioeconomic systems, there are some elements of the analytical framework that are still valid. In the centrally-planned economies the most important economically and politically —the Soviet Union—, an abundant supply of natural resources, especially for energy, but also for mining (a surplus of US$50 billion and US$2 billion, respectively, in 1984) goes hand-in-hand with a growing structural deficit, not only in the agricultural sector, which has already been widely studied, but also in the manufacturing sector (US$14 billion and US$27 billion deficit in 1984). In 1984, the manufacturing deficit was equivalent to approximately one-third of the United States deficit and three times higher than that of another industrialized oil-producing country, the United Kingdom.

Thus, the wealth of natural resources which the Soviet Union possesses could have had something to do, as it did in the United States and the United Kingdom, with its weak international position as regards industry. The three countries are relatively efficient at channelling resources to high-technology products for military use. This fact, which is one of the issues in the unresolved controversy as to how much research and development for military technology affect the industrial sector, seems to show that, at least in certain time periods, low international competitiveness in tradeable products can coexist with levels of excellence in military production. This may be partly due to the fact that the two activities are radically different as regards their objectives, procedures, time limits and organization.

The military are concerned with defining objectives and goals more than with time limits, and economic constraints play a very subordinate

role; there is no question of long-term scheduling or commercial industrial production, since the main concerns are flexibility and the ability to adjust rapidly to changing trends in international trade. Moreover, in the military, commercial competition is not so intense nor does it involve the same time limits. The replacement of successive generations of products and differentiation within each generation are not determined (luckily) by their efficiency in actual practice. Military production offers conditions which attract the most notable experts in science and technology, such as a quiet place to work, an abundance of resources and the absence of pressures to obtain results within short time limits, in addition to the fact that salaries are not subject to the dynamics of the market.

All the above would seem to form a scenario in which we have one group of countries that have channelled immense resources to military uses but have a very precarious participation on the international market for traditional industrial products, and another group, with a high level of industrialization, who hardly devote any resources to military uses, and are in the lead in international competition for those products. The main countries with a manufacturing surplus (1984), Japan, the Federal Republic of Germany and Italy, taken together, showed a manufacturing surplus of around US$217 billion. All three were losers in World War II. This surplus provides a contrast with the situation of the countries that won the war: the United States has a manufacturing deficit of US$82 billion; the Soviet Union, of US$26 billion, and the United Kingdom, of US$10 billion, for an overall total of US$118 billion.

In general, the countries that have been at the fore in industry, which were defeated militarily in World War II, cover the deficits of those who won the war and of the other countries, especially the third world ones.

As regards the participation of these two groups of countries in the capital goods trade over the last 20 years, we may note that in 1965, the United States, the Soviet Union and the United Kingdom provided approximately 35% of the world supply of those products, whereas the defeated countries supplied 29%. This situation has been completely reversed, so that in 1984, the main military powers supplied only 24% of the world supply of those products, whereas those countries which focused their attention on tradeable industrial products raised their participation to 42%. A comparison of the population of these countries will show that the "industrialists" represent 40% of the population of the "militaristic" countries: 238 million in Japan, Italy and the Federal Republic of Germany, compared with 570 million for the United States, the Soviet Union and the United Kingdom. In order to maintain their military hegemony, these three countries use 60% of the total amount of resources allocated for defense purposes throughout the world, whereas the Federal Republic of Germany, Japan and Italy devote a little less than

Figure XXI

INTERNATIONAL COMPETITIVENESS AND DEFENSE EXPENDITURE

(Average: 1981-1983)

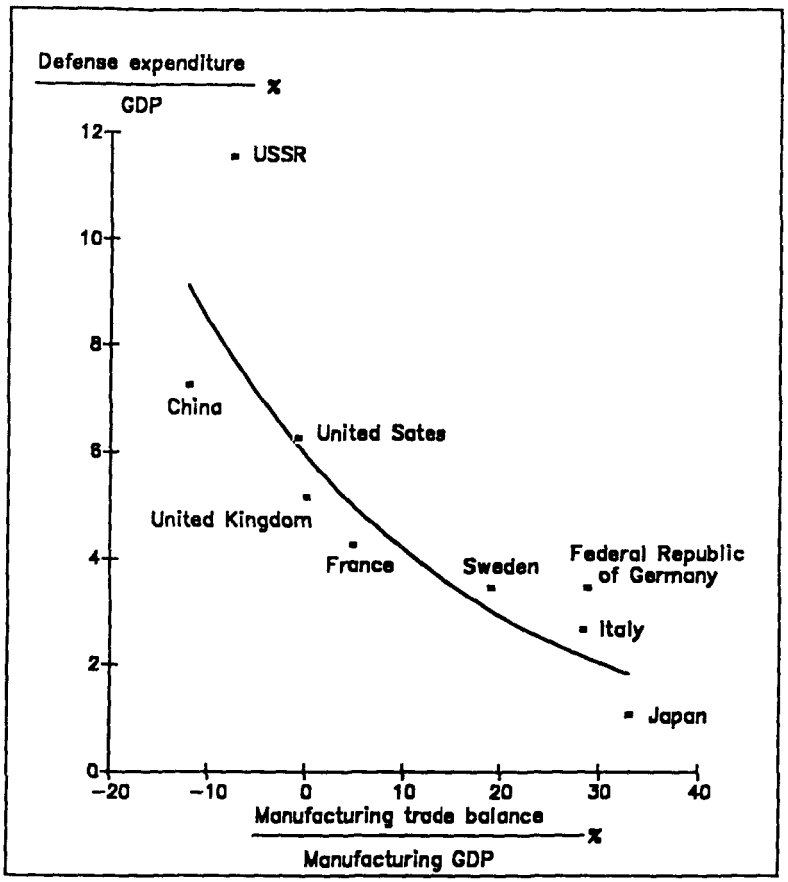

Source: Joint ECLAC/UNIDO Industry and Technology Division, based on SIPRI Yearbook 1987, World Armaments and Disarmament; and UNIDO, Data Base.

8% of world expenditures to defense. As regards the relationship between military expenditures (in terms of GDP) and international competitiveness in the industrial sector (manufacturing surplus or deficit in terms of the manufacturing product), as shown in figure XXI, there is a reverse relationship, with the Soviet Union and the United States at one end, and the Federal Republic of Germany and Japan at the other,

while the United Kingdom, France, Sweden and Italy are in the intermediate positions. Contrary to traditional wisdom, the multiplier effect of defense expenditures on industrial competitiveness is actually a negative one.

A disarmament agreement between the United States and the Soviet Union could considerably reduce the amount of resources allocated for military purposes and, assuming the diagram expresses the efficiency of each country, the curve would then be changed to show increased industrial competitiveness, a key factor in the external deficit of these countries. Under this hypothesis, not only would they help improve the living standards of their peoples, but they would foster the recovery of balance in commercial and financial flows, in addition to making mankind more optimistic about the future.

5. Final remarks

This chapter brings to light some elements that are worth noting, as they can be useful in considering the case of Latin America. They are the following:

- The diversity of national models that are able to deal, with varying degrees of success, with the challenge posed by a common external environment.
- The importance of industrial specialization and of the intellectual value added to the available natural resources as a requirement for a sound position on the international market.
- The linkage between the welfare State and industrial competitiveness. Legitimacy and social coherence, along with a sound educational infrastructure, create a framework of macroeconomic efficiency that fosters international competitiveness. The above is somewhat counteracted by the microeconomic rigidities which tend to go along with it.
- The above considerations, along with the apparent negative effect of military expenditure on international competitiveness, seem to indicate that future policies should follow a post-Keynesian line of thinking, and not be based on the widely disseminated and reputable, but simplistic and ahistorical idea, that it would be necessary to return to the eighteenth and nineteenth centuries and to apply pre-Keynesian policies.

VI. LATIN AMERICA AND THE NEWLY INDUSTRIALIZED COUNTRIES

1. Introduction

The comparative study of the industrialization process in countries with different levels of development and socioeconomic systems that we have made in the preceding chapters can provide some elements of judgement to explain why Latin America has that "empty box" —in other words, why it is that no Latin American country fulfills the objectives of growth and equity simultaneously— and why the region has been unable to open the "black box" that would give it access to technical progress.

Growth, in a variety of extraregional experiences, appears to be firmly grounded on high levels of industrial competitiveness; equity, in which the transformation of the agricultural sector seems to exert a decisive influence, not only does not appear to be an obstacle for growth but in many situations tends to reinforce it. There are cases of strong dynamism and low equity which might be explained, essentially, by certain other factors, especially historical ones associated with the backwardness of agriculture. This lack of equity has not been an obstacle to growth, but growth, by relying on competitiveness, may tend to gradually neutralize the inequitable income distribution.

The establishment of strongly competitive industrial systems appears to be associated with a relative scarcity of natural resources, both in the market-economies and in the centrally-planned economies. It seems that the most difficult economic task a society can undertake is that of building an industrial system based on national enterprises that are able to meet the needs of different markets, in terms of quality and costs, especially when markets of developed countries in high- technology sectors are involved. It seems to be a task that is undertaken only when no easier option is available, as would be the case, for example, if the country had rent obtained from natural resources or if it enjoyed a position of international leadership that would enable it, through its financial services and the attractiveness of these to capital from the rest of the world, to counteract the gradual decline in the competitiveness of its industrial systems, which had initially been very advanced. This would be the case of

the United Kingdom, in the first place, and, after World War II and to a different degree, of the United States.

The strictly economic dimension is not sufficient to explain the differences we have noted in the various cases, especially those of countries that have different geopolitical environments and cultural universes; this means that we must include in the analysis those dimensions which have to do with historical processes and the social, political and cultural environment. In the strictly economic sphere, the relationship between equity, austerity, growth and competitiveness would appear to explain the success of some countries. Competitiveness reinforces equity, legitimates austerity and supports growth, unleashing the self-reinforcing cycles which follow. When some of these elements are missing, the process is delayed or modified, independently of the socio-economic system involved, by a failure to transform the agrarian structure, excessive luxury consumption or the easy use of a rent produced by natural resources or an international position of hegemony. Dynamism then becomes only sporadic in some cases, and in others, is asymptotic to stagnation.

We must now take up again the question of Latin America's "empty box" and the region's inability to open the "black box" of technical progress; to this end, we shall compare the three largest countries of Latin America (Argentina, Brazil and Mexico) with the three largest countries which appear in the box where equity comes together with growth, i.e., Republic of Korea, Spain and Yugoslavia. They all have relatively large populations: Yugoslavia, 23 million; Argentina, 30 million; Spain, 39 million; Republic of Korea, 40 million; Mexico, 80 million; and Brazil, 138 million. In almost all except Spain, per capita income is currently around US$2 000; in Spain, it is twice as high, but considering the differences in population, Brazil, Mexico and Spain have a product which is of a comparable order of magnitude; Republic of Korea is similar to Argentina; and Yugoslavia would be equivalent to half of these latter two countries.

2. Absorption of technical progress and participation in the international market

The three countries that meet the requirement of equity with growth have as their distinguishing features a deficit of natural resources and a manufacturing surplus, which in the case of the Republic of Korea began during the 1970s and in Spain and Yugoslavia, during the 1980s. In Latin America, Argentina participates in international trade fundamentally with its agricultural products; Mexico, since the mid-1970s, with oil; and Brazil has an agricultural and mining surplus and, since 1982, a surplus in

the manufacturing sector as well. Brazil shares an energy deficit with the three extraregional countries. Its manufacturing surplus seems to have followed the ups and downs caused by the decline in the domestic growth rate in 1983-1984, the sudden boom of imports from the United States in 1984, the relative fall of the domestic market in 1985 and the rapid growth of the domestic market in 1986. The issue of Brazil's manufacturing surplus is still a matter of discussion, but there is no question that this country, contrary to the other Latin American ones, is now reaping the fruit —the dynamism and competitiveness of its industrial sector— of its 20-year-long effort to promote industry and technology.

The structural change of the industrial sector (figure XXII) is different in the three Latin American countries studied. Argentina, with a profile very similar to that of the United Kingdom, has undergone deindustrialization in a wide variety of branches of industry, during a time of stagnation characterized by a very low growth of labour-intensive sectors using cheap labour, such as clothing, textiles and footwear, a very minor role of the sectors that make intensive use of technical progress, such as capital goods and plastics, and a certain relative importance of steel and basic chemicals; this is a case of stagnation with deindustrialization.

Mexico, with a relatively high growth rate, also began the 1980s with a strong process of deindustrialization and a notable articulation around the axis of petroleum and its by-products, with very little participation of capital goods and slow growth of labour-intensive sectors, but with the steel sector still holding ground.

Brazil, the most dynamic country of the region, has stressed the chemicals sector, has developed non-metal mineral products possibly linked to the expansion of the physical infrastructure, and has seen a strong development of electrical machinery, some deindustrialization during the 1980s in non-electrical machinery and a considerable growth of textiles and leather products associated partly with the increase of exports. In this case also, as in Argentina and Mexico, the food industry has remained relatively dynamic, stimulated by a high population growth rate in Brazil and Mexico and by an excellent supply of natural resources in Argentina.

A comparison of this situation with that of two extraregional countries shows some significant differences (figure XXIII). In the first place, the Republic of Korea, the most dynamic one, more than doubles the rate of the most rapidly growing country in Latin America, Brazil; in the Republic of Korea, growth clearly centres on electrical equipment —a reminder of what characterized sectoral change in Japan— and steel and non-ferrous metals, with leather products and textiles playing an important role; these are labour-intensive and clearly export-oriented categories.

Figure XXII

ARGENTINA, BRAZIL AND MEXICO: STRUCTURAL CHANGES IN INDUSTRY, 1970-1987

ARGENTINA

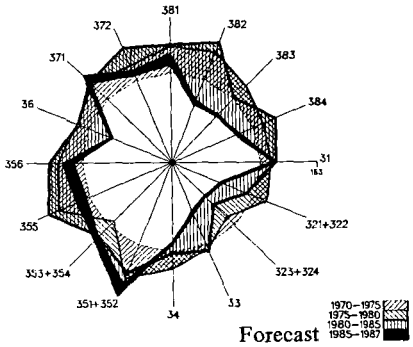

BRAZIL

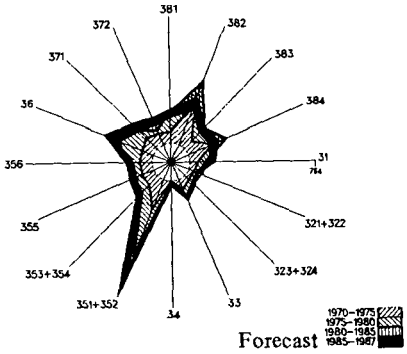

MEXICO

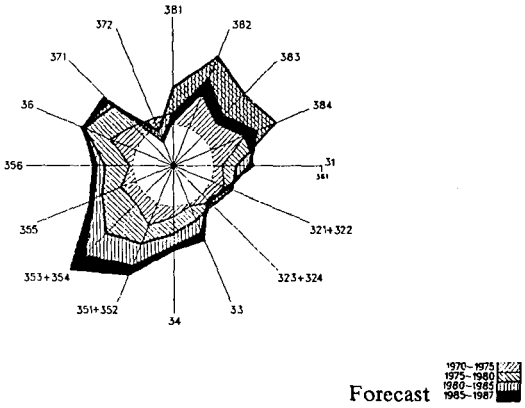

Source: UNIDO.

Figure XXIII

REPUBLIC OF KOREA, YUGOSLAVIA AND SPAIN: STRUCTURAL CHANGES IN INDUSTRY, 1970-1987

REPUBLIC OF KOREA

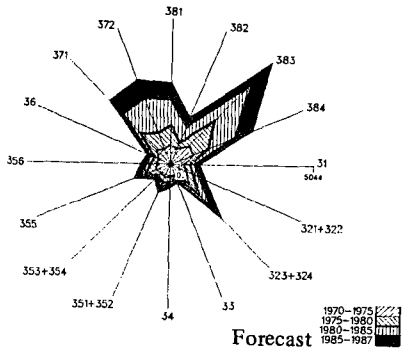

YUGOSLAVIA

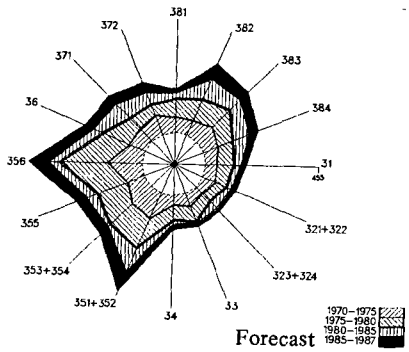

SPAIN

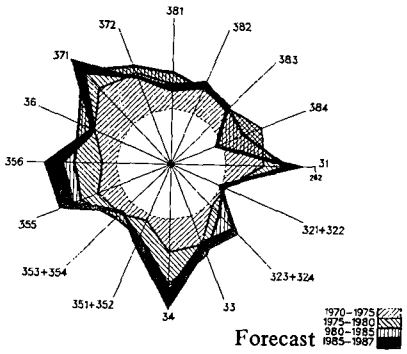

Source: UNIDO.

Spain, the most developed of all the countries considered, has a moderate growth rate, characterized by a marked effort at industrial reconversion; industries such as non-ferrous metals, metal products, transport equipment and non-metal mineral products lost their relative importance during the 1980s, and their position was taken over by branches such as leather products, paper products and printing, rubber products (associated to some extent with the fact that Spain has been chosen as a site by European automobile suppliers), and plastic products. Yugoslavia, whose dynamism is comparable to Brazil's, has a much less specialized profile, with relatively uniform growth and a wide variety of branches, including, in addition to the classical categories of chemicals and plastics, non-electrical machinery, electrical machinery and transport equipment; it maintains its dynamism in the traditional sectors of foodstuffs, clothing, footwear and leather products, in which it is similar to Italy.

An analysis of the participation on the world market of engineering products, a category which is important because of its high content of technological innovation (figure XXIV) brings to light the growing and sustained participation of the Republic of Korea and Spain, which in the mid-1960s had less than 0.2% of the world market, and in 1984 achieved a share of more than 1% (Spain) and 2% (the Republic of Korea), which is similar to the participation of Sweden and the Soviet Union. Yugoslavia's share began to rise in 1980. By contrast, Latin America's share is marginal, less than 0.2% for Argentina (which in 1987 celebrated the centennial of its Argentine Industrial Union, so that one could hardly consider it a new industry) and Mexico, which despite its nearness to a market that is eager for industrial imports (the United States), has for 20 years maintained a share of around 0.5% of the world market. Brazil grew steadily between 1970 and 1980, and has been relatively stable during the 1980s.

Perhaps the most remarkable contrast is the one between Argentina and the Republic of Korea, which have comparable domestic markets, similar populations, and similar per capita product levels, and which both began in 1965 with a share of less than 0.1% of the world market. While Argentina has maintained that position almost constantly, the Republic of Korea has raised its share to 2%. This is the essential difference between a country in which the absorption of technical progress in the industrial sphere, goes hand-in-hand with a desire to conquer international markets with high-technology products on the basis of national enterprises, and one which sits back to survive comfortably with a high standard of living based fundamentally on the rent produced by its natural resources. This situation also obtains, perhaps with some differences of scale, in the case of Mexico.

Figure XXIV

SELECTED COUNTRIES: ENGINEERING PRODUCTS WORLD MARKET SHARE, 1965-1984

(Percentages)

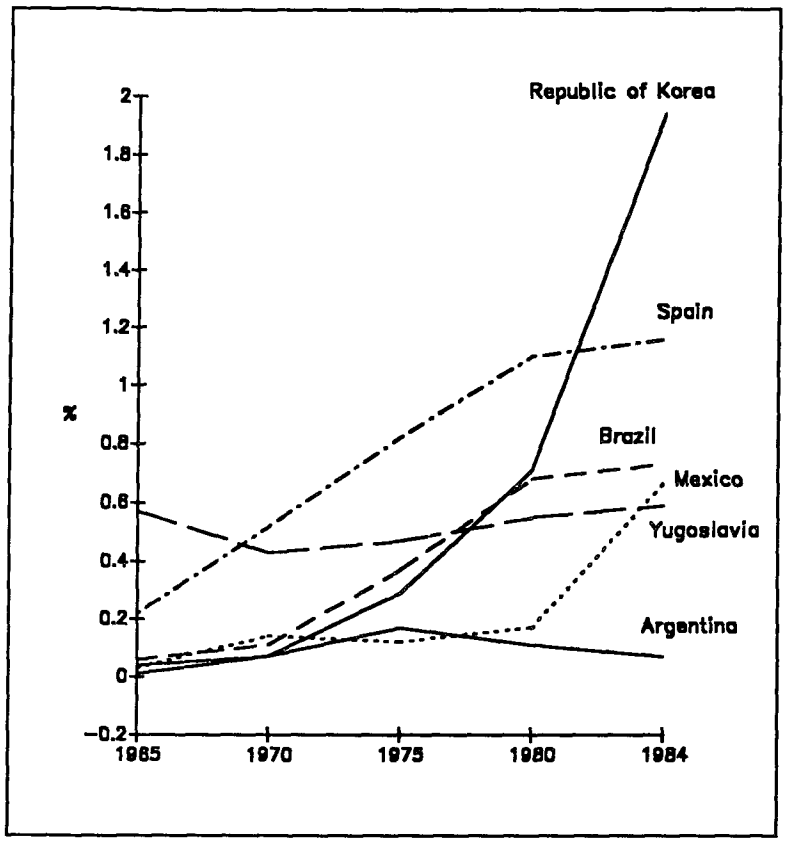

Source: Joint ECLAC/UNIDO Industry and Technology Division.

In the cases of Spain and Yugoslavia, we must bear in mind that they are close to a rapidly growing market, the European Common Market, which Spain has just joined. This may explain some of the industrial progress of these countries, but the contrast between these two countries and Mexico, which also has privileged access to a large market (the United States) and could have performed similarly, shows that this factor has only limited value as an explanation for the differences in growth. Internal factors must also be considered to explain these different performances, especially in view of the fact that during the period under study,

all the countries considered had some fundamental features in common. The first part of the period (1965-1975) is one of rapid growth, and the second is one of greater intensification of international competition, along with slower growth, but for countries with such a marginal share, it still had encouraging possibilities.

An analysis of the evolution of the industrial competitiveness of engineering products (figure XXV) reaffirms the trends suggested by the analysis of participation in the international market: the Republic of Korea, Yugoslavia and Spain saw a steady growth of competitiveness in these products having a high technical content, from 1970 on in South

Figure XXV

SELECTED COUNTRIES: ENGINEERING PRODUCTS INTERNATIONAL COMPETITIVENESS, 1965-1984

(Export-import ratio, percentages)

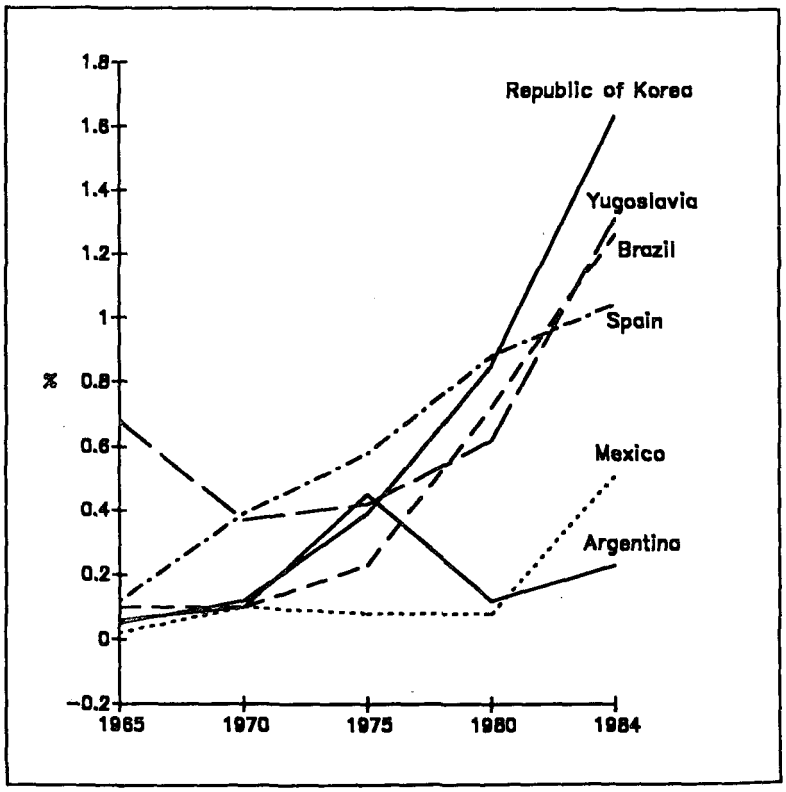

Source: Joint ECLAC/UNIDO Industry and Technology Division.

Korea and from 1965 on in Spain; in other words, these countries, whose exports of capital goods at the beginning of the period covered 10% of the corresponding imports, managed, in 20 years, to cover almost 80% of imports. During this period, these countries absorbed technical know-how, incorporated it overall in their national enterprises, especially in the Republic of Korea, and projected it towards the international market. These figures throw light on the evolution of productivity in these countries and on their ability to disseminate that productivity to industrial activity as a whole.

In Latin America, levels of competitiveness remained stationary in Argentina and Mexico between 1965 and 1980, except for the period 1970-1975 in Argentina, which appeared to begin a process of rapid industrial learning but which subsequently, as a result of well-known internal events, returned to its previous position.

Considering the recent evolution of competitiveness (figure XXV) in Argentina, Brazil and Mexico during the 1980s, it is important to bear in mind that during this period, growth declined considerably, along with imports of capital goods. Especially in Argentina and Brazil, imports in these categories between 1980 and 1984 fell by almost one-third, and in Mexico by 60%; in the meantime, exports in these categories remained almost constant, except in Mexico, where they grew considerably during this period. The increased competitiveness of Argentina, Brazil and, to a lesser extent, Mexico during the early 1980s is therefore due more to a drop in imports than to a major improvement in competitiveness in these categories. In the Republic of Korea, on the other hand, imports of capital goods almost doubled between 1980 and 1984; in Spain, imports and exports remained relatively constant, and in Yugoslavia, where the impact of the crisis was also felt sharply, imports were reduced, and exports remained at the same level, so that the index showing an increase in competitiveness of that country is also relatively spurious.

Thus, a fundamental distinguishing feature of the Latin American countries, especially Argentina and Mexico, and of the Republic of Korea and Spain, is the fact that over the past 20 years, they have undergone a process of incorporation of technical progress, not only through the physical transfer of information to those territories, but also through its incorporation into products geared both to the domestic and to the international markets; in both cases, there was a strong proportion of exports to the markets of industrialized countries. Brazil seems to have some similarities with the Republic of Korea and Spain as regards competitiveness in sectors having a high content of technical progress, but it is different with regard to the very central element of the distribution of the benefits of that technical progress to society as a whole.

3. *Pattern of industrialization, growth and equity*

In comparing consumption patterns and industrial competitiveness with the objectives of growth and equity (figure XXVI), one is struck by the fact that the three extraregional, recently industrialized countries have a much higher degree of equity than the three Latin American countries. This higher level of equity is associated with higher levels of dynamism and industrial competitiveness as well; not only is greater equity not incompatible with dynamism, but it coexists with levels of dynamism that are much higher than those of Argentina and Mexico, and comparable to that of Brazil.

Leaving out the consumption level of Spain (which has a per capita income twice as high as that of the other countries), it should be noted that despite the differences in income distribution, the density of consumption is similar in the five countries, i.e., the concentrated income distribution in the Latin American countries makes it possible for middle-income sectors to have a consumption pattern equivalent to that of societies with much higher incomes. The 13 million Brazilians and 7 million Mexicans who have an average annual income of US$10 000 adopt and disseminate a consumption pattern that is copied from the developed societies, adjusting the physical, energy and communications infrastructures to fit it. The 52 million Brazilians or 28 million Mexicans who have an average annual per capita income of US$350 are largely excluded from this consumption pattern, but do not prevent the development pattern from responding to the expectations of the élites.

A remarkable contrast may be seen in the case of the Republic of Korea, where high levels of dynamism, equity and competitiveness coexist with a much more pronounced austerity than in the other countries considered. This difference becomes particularly important when one considers that automobile density is being used as an indicator of consumption patterns, and that this is a product in which the Republic of Korea, with its national enterprises, has developed a substantial volume of exports, especially to developed countries like the United States and Canada. The Korean élite, despite their authoritarian nature, are clearly aware of the fact that it is very different for a country to develop its own production of goods that are characteristic of the developed countries in order to compete on the markets of those countries, than to reproduce consumption in those categories at the domestic level. An illustration of this policy of harmonizing the gradual dissemination of consumption patterns with the objectives of growth and competitiveness is the case of colour television sets. Around 1981, Korea was already a large exporter of those products, but their consumption was restricted on the domestic market. The official explanation was based on the idea that to prema-

Figure XXVI

SELECTED COUNTRIES: STRATEGIC PROFILES

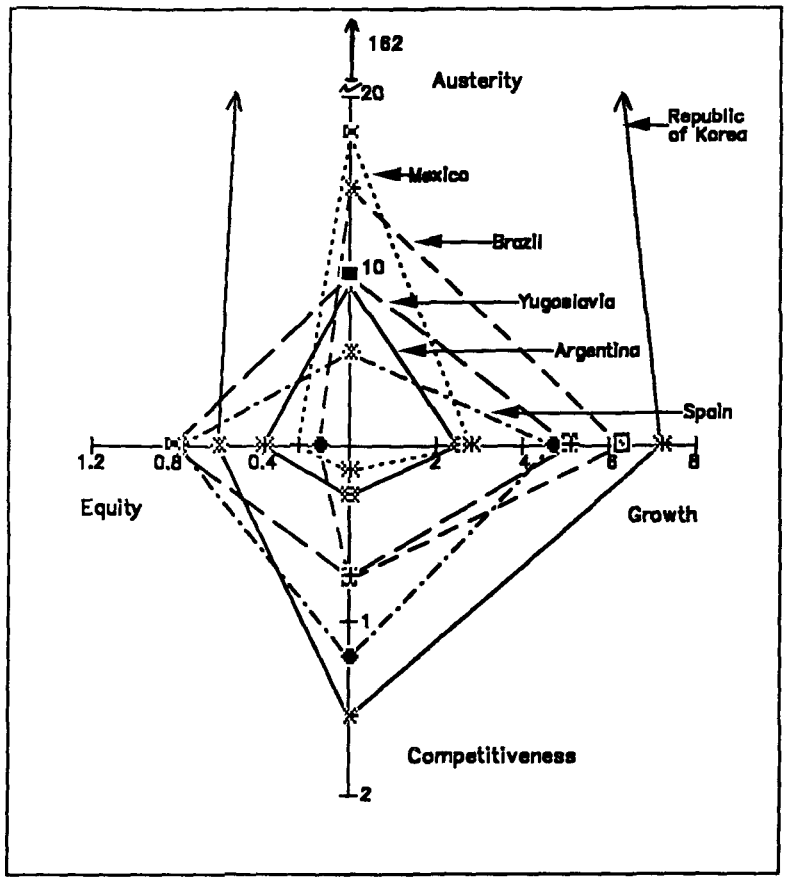

Source: Joint ECLAC/UNIDO Industry and Technology Division.

turely disseminate those products which the country was just beginning to produce for export to the rest of the world would have brought about a deterioration of the savings capacity of Korean families. This clearly shows the distinction between the concept which the Latin American élites have of the dissemination of the consumption pattern of the developed countries and the view held in the Republic of Korea. In Latin America, the ideal is to reproduce at the top of the income pyramid the consumption pattern of those countries, without any major concern about the situation of the population that would be excluded, much less

about the possibility of attaining competitiveness on the international market. The relationship between the importance of consumption and the relatively low level of equity for the three Latin American countries brings to mind, with differences of income, the pattern of the United States, and the same is true of the elements of competitiveness in Argentina and Mexico. These are patterns in which the predominant axis of consumption is associated with a relatively high level of inequity, especially in Mexico and Brazil, and a low level of competitiveness in Argentina and Mexico.

In Brazil we see a hybrid pattern in which consumption follows the United States pattern, and competitiveness and dynamism follow the example of Japan, there being a non-transferable pathology in regard to equity. The second development plan, drawn up in 1974-1975, might be summarized in terms of the following goal: "Brazil wants to be Japan". In drawing up this plan, the similarities between the two countries in terms of population were explicitly mentioned, and emphasis was placed on the more favourable position of Brazil as regards the availability of natural resources. Mention was made of the importance of completing Brazil's industrial structure by developing widely used inputs and capital goods which had lagged behind.

This description, which covers the period 1960-1979, would have been different if the 1980s had been included. The diagrams showing the position of the Latin American countries would have shown changes for the worse: dynamism fell, the adjustment carried out, especially during the period 1980-1983, led to a high probability of accentuating the already deficient income distribution, and competitiveness did not increase significantly, especially in Argentina and Mexico. On the other hand, consumption, symbolized by automobile density, despite the decline of the period 1980-1983, was revived during the period 1984-1985; the diagrams for Argentina and Mexico would have come closer and closer to showing a dominant axis of consumption with a reduction towards the origin of the other three dimensions.

Brazil lost dynamism and equity, but maintained, and increased, since 1984-1985, its competitiveness, keeping consumption at full level. In brief, the contrast between the Latin American countries and the newly industrialized extraregional countries would appear much more unfavourable for Latin America if the 1980s had been included.

Around 1986, the GDP per capita of Latin America had fallen by approximately 11%. With all the exceptions arising from the characteristics of the different countries, the questions regarding the international economy and the high degree of indebtedness, an optimistic hypothesis for 1990 would be to recover the 1980 level of per capita income, although income distribution would surely be even more unfavourable than that described here. A decade would have been lost but, in addition,

the social tension associated with the uneven distribution of the cost of readjustment would also have increased. All this would not have had any effect on the growing importance, both in actual fact and in expectations, of a consumption pattern which is beginning to prove difficult to sustain even in the country where it originated.

While it is true that the external debt on which attention has been focused over the last few years is a significant obstacle to the recovery of growth, it is no less true that what is really at stake in Latin America is the development pattern itself, which needs to be reformulated. Indeed, not much would be gained by eliminating the external debt problem if the countries resumed a pattern with the aforementioned characteristics. The "empty box" —which seems even more difficult to fill, since the 1980s, for countries that combine dynamism with disarticulation or relative articulation with stagnation— represents a development pattern which cannot realistically be considered capable of surviving the crisis of this decade.

VII. CONCLUSIONS

Among the lessons to be learned from this exploratory exercise, it seems worthwhile to stress the following:

• The soundness of a country's participation in the international market is closely linked with its ability to add intellectual value to its supply of natural resources. It would be naive to aspire to a strong position on the world market without incorporating technical progress into those resources. The fact that a country has natural resources does not mean it has to give up the rents these can bring, but it is essential that such rents must be applied to the transformation and modernization of the agricultural sector and to the strengthening of an industrial sector that is able to increase its share and its competitiveness on the international market.

• The widely disseminated idea that there is a law of compensation between growth and equity does not hold up under examination of the empirical evidence in a wide range of national situations. It is true that within Latin America, the two objectives have not coincided and that countries with greater equity have had stagnation and countries with great dynamism have not had equity, but this localistic approach to the relationship between the two objectives is refuted by a comparison of the Latin American pattern and the patterns of other regions having different socioeconomic systems and levels of development. Contrary to the case with sporadic growth, sustained growth calls for an equitable society that is well-articulated internally, creating the right conditions for a sustained effort to incorporate technical progress and raise productivity and hence, growth.

• As long as the élites of Latin American societies continue to set their hopes on the short-sighted and prosaic goal of copying, at the top of the income pyramid, the lifestyle of the developed countries, ignoring the fact that even the United States, where this lifestyle originated, is already having difficulty sustaining it and, moreover, trying to propagate it as a collective goal to the rest of society (adjusting the structure of land use,

energy, transport and communications to that objective), the situation might well change unpredictably, so that while today there is an empty box, it might be that tomorrow the fullest box would be the one showing stagnation with social disarticulation.

• The opening of the black box of technical progress is a task which goes beyond the scope of industry and entrepreneurship, and becomes a part of an attitude on the part of overall society with regard to this issue. This new activity, in which creative imagination is valued by society, i.e., the search for formulas that will respond to a country's shortcomings and internal potentialities, calls for a change in the élite who shape the values and orientation that are disseminated throughout society as a whole. It would be difficult to establish compatibility between a leadership which is strongly influenced by *rentier* sectors and financial intermediaries, either private or public, and the dissemination throughout society of values in which internal shortcomings and potentialities become the leading axis for economic and social transformation. The growing dissemination of modern objects in Latin America in no way changes the weakness of the traditional social relations into which these objects are incorporated. How modern a society is has less to do with the objects that are disseminated within it than with the modernness of its institutions and of the relationships on which the design, acquisition, selection and evaluation of the usefulness of those objects are based.

• It is difficult to conceive how the countries of the region will handle the task with which they are faced, of changing not only the economic structures but also the concepts which the different strata of society have of the challenge before them and how to meet it, unless the forces of the different social strata are able to work together wholeheartedly in the search for solutions. It is difficult to believe that there will be any change for the better unless Latin American societies become democratic, and allow the active and permanent participation of those who thus far have not benefited from the development pattern followed. Nevertheless, we must not forget that there is no guarantee that the democratization process will be able to legitimate itself economically in a context such as the one described above, nor can it be guaranteed to respond quickly to the shortcomings currently being faced. Democratization in some countries of the region has partly been a reflection of the inability of the authoritarian régimes that preceded it to solve those problems, and it would be naive to assume that the symbolic goods that democratization disseminates can continue for much longer to make up for the concrete solutions which some of the problems urgently require. Consequently, the medium and long- term potential of the democratization process is at odds, over the short term, with the urgent need to find forms of legitimation in fundamental sectors.

• The above necessarily leads us to consider the possibility of having access to resources from the developed countries, in order to support this recovery. So far, emphasis has been placed on the importance of internal change and it has even been suggested that external financial aid would not be appropriate if it simply led to a prolonging of the former development pattern. However, the economic, social, political and cultural transformation that is required in Latin America, which is supported by internal effort, requires a complementary external support. If the surplus countries, i.e., those that are able to channel resources outside their own boundaries (Japan and the Federal Republic of Germany, mainly) take no interest in the situation of the developing countries and continue, as in recent years, centering their attention on the possibility of resolving the disequilibria among them, especially in view of the United States' deficit in its external and fiscal positions, they may indeed find some formula for civilized coexistence among themselves, turning their backs on the increasingly dramatic situation which is developing in the southern hemisphere. The main debtor country, the United States, would have to take the necessary measures to live within its means, and the surplus countries, instead of orienting resources to maintain the United States consumption pattern, should direct them to the southern countries. It is extremely important that those countries undertake, on their own, certain economic and social changes that would enable them to absorb those resources so as to transform their development patterns, and those resources should allow for compatibility between the short-term requirements associated with the current crisis, generating changes that will make it possible to fill the box which now stands empty.

• The sequence which seems to emerge from the study is the following: equity, austerity, growth and competitiveness. Thus, the reality is different from the theory, which starts with competitiveness and does not stress the technological content of exported goods, in the view that growth will follow from the dynamic effect of the international market, which would gradually incorporate the previously excluded population. Both experience and internal and external political and economic considerations show that in Latin America, it will be increasingly difficult to put off dealing with the issue of equity, even though this will mean bringing up unpleasant issues from the past which seem to have been overtaken by modern developments.

• An important factor in the generation of resources in the north and in the way they are utilized in the south, is the reduction of expenditures on armaments. In the north, there seems to be a reverse relationship between industrial competitiveness and the war effort, which suggests that a reduction of expenditures on armaments would facilitate

———, 1983, *The influence of Keynes on French economic policy: past and present*, CNRS-CEPREMAP, No. 8404.

Boyer, Robert and Jacques Mistral, *La crise actuelle: D'une analyse historique a une vue prospective*, CNRS-CEPREMAP, No. 8304.

Branson, William R. and others, 1980, "Trends in United States international trade and investment since World War II", *The American economy in transition*, Martin Feldstein (ed.), Chicago, The University of Chicago Press.

Braña, J. and others, 1984, *El Estado y el cambio tecnológico en la industrialización tardía. Un análisis del caso español*, Mexico City, Fondo de Cultura Económica.

Bresser Pereira, L.C., 1977, *Estado de subdesenvolvimento industrializado*, Sao Paulo, Editora Brasiliense.

———, 1977, *Notas introdutorias ao modo tecnoburocrático ou estatal de producao*, Estudios CEBRAP No. 20, April-May-June.

Brinkman, Richard L., 1968, "The genesis of a new industrial policy: equity and efficiency", *Journal of Economic Issues*, vol. XX, No. 2, June.

Brown, Lester R. and others, 1986, *State of the world 1986. A worldwatch Institute Report on progress toward a sustainable society*, New York and London, W.W. Norton & Co.

Cardoso, F.H., 1964, *Empresario industrial e desenvolvimento económico*, Sao Paulo, Difusao Europeia do Livro.

———, 1971, *Ideologías de la burguesía industrial en sociedades dependientes (Argentina y Brasil)*, Mexico City, Siglo Veintiuno Editores.

———, 1977, *Hegemonia burguesa e independencia económica: raizes estruturais da crise política brasileira*, Rio de Janeiro, Paz e Terra.

Cardoso, F.H. and E. Faletto, 1965, *Dependencia e desenvolvimento na América Latina*, Santiago, Chile, ILPES.

Centre d'Etudes Prospectives et d'Information Internationales, *Economie mondiale: la montée des tensions. Rapport du CEPII*. Ed. Economica, Paris, 1983.

Centre on Transnational Corporations, 1983, *Transnational Corporations in World Development. Third Survey*, New York. United Nations publication, Sales No. E.83.II.A.14.

———, 1983, *Salient Features and Trends in Foreign Direct Investment*, New York. United Nations publication, Sales No. E.83.II.A.8.

———, 1985, *Trends and Issues in Foreign Direct Investment and Related Flows: a technical paper*, New York. United Nations publication, Sales No. E.85.II.A.15.

Ciriacy-Wantrup, S.V., 1957, *Conservación de los recursos. Economía y política*, Mexico City, Fondo de Cultura Económica.

Cohen, Stephen and others, 1984, *Competitiveness* (working paper of the Berkeley Round Table on the International Economy), November.

Cohen, Stephen and John Zysman, 1987, "The myth of a post-industrial economy", *Technological Review*, February-March.

———, 1987, *Manufacturing matters. The myth of the post-industrial economy*, Basic Books, Inc.

Correa, Carlos M., 1984, "Características y tendencias de la regulación de las inversiones extranjeras en América Latina y el Caribe", *Integración Latinoamericana*, año 9, No. 97, December.

Cortázar, René, 1982, *Desempleo, pobreza y distribución: Chile 1970-1981*, Apuntes CIEPLAN, No. 84, Santiago, Chile, CIEPLAN.

Daedalus, 1982, "Print culture and video culture", Autumn.

Devlin, Robert, "Socioeconomic restructuring in latin America in the face of foreign debt and a transfer problem", Santiago, Chile, ECLAC, February 1987 (unpublished).

Di Filippo, Armando, 1984, "Social use of the surplus, accumulation, distribution and employment", *CEPAL Review*, No. 24 (LC/G.1324), Santiago, Chile, December. United Nations publication, Sales No. S.84.II.G.5.

Drucker, P., 1984, "Our entrepreneurial economy", *Harvard Business Review,* January-February.

ECLAC (Economic Commission for Latin America and the Caribbean), 1951, *Economic Survey of Latin America, 1949* (E/CN.12/164/Rev.1), New York. United Nations publication, Sales No. 1951.II.G.1.

———, 1963, *The social development of Latin America in the Post-War Period* (E/CN.12/660), Santiago, Chile. (Introduction written by José Medina Echavarría.)

———, 1981, *Multilateralismo y bilateralismo en la ALADI* (LC/R.564), Santiago, Chile.

———, 1986a, *Antecedentes estadísticos de la distribución del ingreso. Brasil 1960-1983* (LC/G.1387), Santiago, Chile.

———, 1986b, *Preliminary Overview of the Latin American Economy* (LC/G.1454), Santiago, Chile.

———, 1986c, *Banco de datos sobre inversión extranjera directa en América Latina y el Caribe, sobre la base de información de organismos multilaterales y de gobiernos de países de origen de la inversión* (LC/L.386), vol. I, Santiago, Chile.

———, 1987, *Raúl Prebisch: un aporte al estudio de su pensamiento* (LC/G.1461), Santiago, Chile. United Nations publication, Sales No. S.87.II.G.6.

———, 1986, "The changed world economy", *Foreign Affairs,*Spring.

Egdhal, R., 1984, "Should we shrink the health-care system?", *Harvard Business Review,* January-February.

Evans, Peter, 1979, *Dependent development: the alliance of multinational, state and local capital in Brazil,* Princeton, N.Y., Princeton University Press.

Faletto, Enzo, 1981, *Burocracia y Estado en América Latina,* FLACSO.

FAO (Food and Agriculture Organization of the United Nations), 1987, *El minifundio en América Latina* (Round Table Meeting on Small-scale Agriculture and Sixth Inter-agency Follow-up Meeting on the World Conference on Agrarian Reform and Rural Development), Santiago, Chile, April.

Fajnzylber, F., 1983, "Industrialización", *Internacionalización en América Latina,* Mexico City, Fondo de Cultura Económica, 1981.

———, *La industrialización trunca,* Mexico City, Editorial Nueva Imagen/(Republished in Buenos Aires in 1985 by Grupo Editor Latinoamericano).

———, 1986, "Democratization, endogenous modernization and integration: strategic choices for Latin America", *The United States and Latin America in the 80's,* K. Middlebrook and C. Rico (eds.), Pittsburgh, Pittsburgh University Press.

———, "The United States and Japan as models of industrialization for the Latin American and East Asian NIC's", *Development strategies in Latin America and East Asia,* Gary Gereffi and Donald L. Wyman (eds.) (in the press).

Foxley, A., 1985, *El problema de la deuda externa visto desde América Latina,* Santiago, Chile, CIEPLAN, December.

Ffrench-Davis, Ricardo, 1979, *Economía internacional, teorías y políticas para el desarrollo,* Mexico City, Fondo de cultura Económica.

———, 1981, "Intercambio y desarrollo", *El Trimestre Económico,* No. 38.

———, 1983, "Estrategia de apertura externa selectiva", *Reconstrucción económica para la democracia,* Santiago, Chile, CIEPLAN.

Ffrench-Davis, Ricardo and Richard Feinberg (eds.), 1986, *Más allá de la crisis de la deuda: bases para un nuevo enfoque,* Santiago, Chile, CIEPLAN.

Garrett, Geoffrey and Peter Lange, 1986, "Performance in a hostile world: economic growth in capitalist democracies 1974-1980", *World Politics,* vol. XXXVIII, No. 4, Princeton University Press, July.

Gereffi, Gary, "Development strategies in Latin America and East Asia: toward an explanatory framework", *Development strategies in Latin America and East Asia,* Gary Gereffi and Donald L. Wyman (eds.) (in the press).

Gerschenkron, Alexander, 1965, *Economic backwardness in historical perspective,* Harvard University Press.

Goldsbrough, David, 1985, "Financing direct investment in developing countries: trends, policies and prospects", *Finance and Development,* vol. 22, No. 1, March.

Gordon, R., 1980, "Postwar macroeconomics: the evolution of events and ideas", *The American economy in transition,* M. Feldstein (ed.), Washington, D.C., National Bureau of Economic Research.

Grossman, Gene M., 1984, "International trade, foreign investment and the formation of the entrepreneurial class", *American Economic Review,* vol. 47, September.

Group of Thirty, 1984, *Foreign direct investment 1973-1987: a survey of international companies,* New York.

Hayami, Yujiro and Vernon W. Ruttan, 1985, *Agricultural development. An international perspective,* Boston, The Johns Hopkings University Press.

Herzog, Colette, "L'Allemagne entre son excédent industriel et son déficit d'invisibles", *Economie Prospective Internationale,* third quarter, No. 23.

Hirschman, A. 1986, *The political economy of Latin American development: seven exercises in retrospection,* Boston, International Congress of the Latin American Studies Association, October.

ILO (International Labour Organisation), 1984, *Income distribution and economic development. An analytical survey,* Geneva.

Isaac, J. M., 1986, *Estrategias de desarrollo tecnológico: el caso de España,* Seminar on Technology Policies and Industrial Restructuring, organized by Banco de la Provincia de Buenos Aires and World Bank, July.

Johnston, Bruce P. and Peter Kilby, 1979, *Agriculture and structural transformation. Economic strategies in late-developing countries,* Oxford University Press.

Joint ECLAC/UNIDO Industry and Technology Division, 1985, "Ciencia y tecnología en la OCDE y posición relativa de América Latina", *Industrialización y desarrollo tecnológico,* No. 1, Santiago, Chile, ECLAC, September.

Jorgensen, D., 1986, "Macroeconomics and productivity", *The positive sum strategy,* R. Landau and N. Rosenberg (ed.), Washington, D.C., National Academy Press.

Katzenstein, Peter J., 1985, *Small states in world markets. Industrial policy in Europe,* Cornell University Press.

Kindleberger, Charles O. and others (eds.), 1983, *Multinational Corporations in the 1980's,* Cambridge, Mass., MIT Press.

Klein, Lawrence R., 1986, "Disarmament and socio-economic development", *Disarmament,* vol. IX, No. 13, New York, United Nations.

Koblik, Steven (ed.), 1975, *Sweden's development from poverty to affluence 1750-1970,* University of Minnessota Press.

Lahera, Eugenio, 1985, "The transnational corporations and Latin American international trade", *CEPAL Review,* No. 25 (LC/G.1338), Santiago, Chile, April.

Landau, R. and N. Rosenberg (eds.), 1986, *The positive sum strategy,* Washington, D.C., National Academy Press (contains interesting articles by M. Boskin, D. Jorgensen and A. Friedlander on the importance of sectoral separation).

Lecaillon, Jacques and others, 1984, *Income distribution and economic development. An analytical survey,* Geneva, International Labour Organisation.

Lewis, Donald D., 1985/1986, *Sweden's manufacturing sector. A modern success story,* Reprint Series No. 312, Stockholm, University of Stockholm, Institute for Economic Studies.

Leff, Nathaniel H. and Kazuo Sato, 1986, "Entrada de capital extranjero, ahorro interno e inversión en la América Latina: una historia negativa y precautoria", *El trimestre Económico,* vol. 53(3), No. 211.

Leontieff, Wassily W., 1983, "Technological advance, economic growth, and the ditribution of income", *Population and Development Review,* vol. 9, No. 3, September.

Lodge, George C., 1986, *The new American ideology. How the ideological basis of legitimate authority in America is being rationally transformed - the profound implications for our society in general and the great corporations in particular,* New York, New York University Press.

Lodge, George C. and Ezra Vogel (eds.), 1987, *Ideology and national competitiveness. An analysis of nine countries,* Boston, Harvard Business School.

Malabre, Jr., Alfred L., 1987, *Beyond our means. How America's long years of debt, deficits and reckless borrowing now threaten to overwhelm us,* New York, Random House.

Martins, Luciano, 1968, *Industrialização, burguesia nacional e desenvolvimento,* Rio de Janeiro, Editora Saga.

McCormick, Janice, 1987, "France: ideological divisions and global reality", *Ideology and national competitiveness. An analysis of nine countries,* George C. Lodge and Ezra Vogel (eds.), Boston, Harvard Business School.

McGraw, Thomas (ed.), 1986, *America versus Japan. A comparative study. Why the United States and Japan may be on a collission course for world economic leadership,* Harvard Business School.

Massad, Carlos, 1984, *External financing in Latin America: development problems and options,* Washington, D.C., Woodrow Wilson International Centre for Scholars.

———, (ed.), 1985, "The debt problem: acute and chronic aspects", *Journal of Development Planning,* No. 16.

Messine, Philippe, 1985, *Liberté, égalité, modernité. Promesses et menaces de la modernisation,* Paris, Editions La Découverte.

———, 1987, *Les saturniens. Quand les patrons réinventent la société,* Paris, Editions La Découverte.

Mizoguchi, Tochiyuki, 1985, "Economic development policy and income distribution: the experience in East and Southeast Asia", *The Developing Economies,* vol. XXIII-4, December.

Moore, B., 1970, *Social origins of dictatorship and democracy,* Beacon Press.

Newfarmer, Richard S. (ed.), 1985, *Profits, progress and poverty: case studies of international industries in Latin America,* Notre Dame, EE.UU., University of Notre Dame Press.

Newfarmer, Richard S. and Willar F. Mueller, 1975, *Multinational corporations in Brazil and Mexico: structured sources of economic and non-economic power,* Washington, D.C., U.S. Government Printing Office.

Norton, R.D., 1986, "Industrial policy and American renewal", *Journal of Economic Literature,* vol. XXIV, March 1986.

Ocampo, José Antonio and others, 1985, "Ahorro e inversión en Colombia", *Coyuntura Económica,* vol. 15, No. 2, June.

OECD (Organization for Economic Co-operation and Development), 1982, *Politique de l'innovation. Tendances et perspectives,* Paris.

———, 1984, *OECD science and technology indicators. Resources devoted to R & D,* Paris.

———, 1985, *International investment and multinational enterprises. National treatment for foreign-controlled enterprises,* Paris.

———, 1986, *Productivity in industry. Prospects and policies,* Paris.

———, 1985/1986, *Economic surveys,* Paris, various numbers (Denmark, February 1986; Finland, June 1986; France, July 1985; Italy, July 1986; Norway, January 1985; United Kingdom, January 1986; Sweden, May 1985).

Oman, Charles, 1984, *New forms of international investment in developing countries,* Paris, OECD, 1984.

Oxford Analytica, 1986, "America in perspective. The social, economic, political, fiscal and psychological trends that will shape American society for the next ten years and beyond", Boston.

Pack, Howard and Larry E. Westphal, 1986, "Industrial strategy and technological change", *Journal of Development Economics,* No. 22.

Palme, Olof and others, 1982, "Military spending: the economic and social consequences", *Challenge,* September.

Papanek, Gustav and Oldrick Kyn, 1986, "Effect on income distribution of development, the growth rate and economic strategy", *Journal of Development Economics,* vol. 23, No. 1, September.

Pinto, Aníbal, 1965, "Concentración del progreso técnico y de sus frutos en el desarrollo latinoamericano", *El Trimestre Económico,* January-March.

———, 1976, "La CEPAL y el problema del progreso técnico", *El Trimestre Económico,* April-June.

Pinto, Aníbal and A. Di Filippo, 1979, "Desarrollo y pobreza en la América Latina: un enfoque histórico estructural", *El Trimestre Económico,* No. 183, July-September.

Piore, Michael J. and Charles F. Sabel, 1983, "Italian small business development: lessons for U.S. industrial policy", *American industry in international competition. Government policies and corporate strategies,* John Zyman and Laura Tyson (ed.), Cornell University Press.

———, 1984, *The second industrial divide: possibilities for prosperity,* New York, Basic Books.

Prebisch, Raúl, 1951, *Theoretical and Practical Problems of Economic Growth* (E/CN.12/221), Santiago, Chile, ECLAC.

———, 1983, "Five stages in my thinking on development", *Pioneers in Development,* Gerald M. Meier and Dudley Seers (eds.), New York, Oxford University Press.

———, 1984, *Inequality and capital accumulation in peripheral capitalism,* Oxford University Press.

Quesnais, F., 1986, "Science, technology and competitiveness", *STI Review,* No. 1, Autumn, Paris, OECD.

Ram, Rati, 1985, "Role of real income level and income distribution in fulfillment of basic needs", *World Development,* vol. 12, No. 5, May.

Ramos, Joseph, 1986, *Capital immobility and the distribution of income,* University of Notre Dame, Helen Kellog Institute for International Studies.

Raymond, Vernan, 1985, *Exploring the global economy: emerging issues in trade and development,* Lanham, Harvard University, Centre for International Affairs.

Reeder, Charles B., 1986, "The effect of recent macroeconomic policies on innovation and productivity", *The positive sum strategy. Harnessing technology for economic growth,* Ralph Landau and N. Rosenberg (ed.), Washington, D.C., National Academy Press.

Reich, Robert B., 1983, *The next American frontier: a provocative programme for economic renewal,* New York, Penguin Books.

Ribeiro, José Félix and others, "Trois économies sudeuropéennes dans la CEE à douze: l'Italie, l'Espagne et le Portugal", *Economie Prospective Internationale,* third quarter No. 23.

Rosenberg, N., 1986, "The impact of technological innovation: a historical view", *The positive sum strategy,* R. Landau and N. Rosenberg (ed.), Washington, D.C., National Academy Press.

Rothgeb, John M., 1985, "Contribution of foreign investment to growth in Third World States", *Studies in Comparative International Development,* vol. 19, No. 4, Winter.

Sagasti, F. and C. Cook, 1985, *Tiempos difíciles: ciencia y tecnología en América Latina durante el decenio de 1980,* Lima, GRADE.

Salowsky, Marcelo, 1982, "Distribución del ingreso, necesidades básicas y 'trade-offs' con crecimiento: el caso de los países latinoamericanos semiindustrializados", *Cuadernos de Economía,* vol. 19, No. 56, April.

Samuelson, P., 1980, *Economics,* 11th edition, McGraw Hill Book Corp.

Schejtman, A., 1985, "Sistemas alimentarios y opciones de estrategia", *Pensamiento Iberoamericano,* No. 8, July-December.

Schneider, F. and Bruno Frey, 1985, "Economic and political determinants of foreign direct investment", *World Development,* vol. 13, No. 2, February.

Scott, Bruce R., 1984, "National Strategy for stronger U.S. competitiveness", *Harvard Business Review,* No. 62.

Shigetsu, Tsuru, 1983, "Technologies du marché: nouvelles relations internationales", *Economica,* Paris, CEPII.

Singh, Ajir, 1977, "U.K. industry and the world economy: a case of de-industrialization?", *Cambridge Journal of Economics,* vol. 1.

———, 1979, "North Sea oil and the reconstruction of U.K. industry", *De-industrialization,* Frank Blackaby (ed.), London, Heineman.

SIPRI (Stockholm International Peace Research Institute), 1985, *World armaments and disarmament, Yearbook 1985.*

Sourrouille, Juan V. and others, 1984, *Inversiones extranjeras en América Latina: política económica, decisiones de inversión y comportamiento económico de las filiales,* Buenos Aires, IDB/INTAL.

Spant, Roland, 1980, *Wealth distribution and its development in Sweden - with an international comparison,* Stockholm.

Stanbaek, T. and others, 1982, *The service economy. Conservation of human resources,* series 20, Columbia University.

Steihart, J. and C. Steihart, 1985, "Energy use in the United States food system", *Science,* 1985 (cited in A. Schejtman, "Sistemas alimentarios y opciones de estrategia", *Pensamiento Iberoamericano,* No. 8, July-December.

Suzigan, Wilson, 1986, *Industria brasileira, origem e desenvolvimento,* Editora Brasiliense.

Sunkel, O. and N. Gligo, 1983, *Estilos de desarrollo y medio ambiente en América Latina,* Mexico City, Fondo de cultura Económica.

Syrquin, Moshe and Simon Teitel (ed.), 1982, *Trade, stability and equity in Latin America,* New York, Academic Press.

The President's Commission on Industrial Competitiveness, 1985, *Global competition, the new reality,* Wahington, D.C., U.S. Government Printing Office.

Therborn, Goran, 1986, *Why some peoples are more unemployed than others. The strange paradox of growth and unemployment.*

Tokman, V., 1984, "Global monetarism and destruction of industry; *CEPAL Review,* No. 23 (E/CEPAL/G.1311), August. United Nations publication, Sales No. E.84.II.G.4.

Trejo Reyes, Saúl, 1982, "Distribución del ingreso, empleo y precios relativos", *Comercio Exterior,* México City, vol. 32, No. 10, October.

Tyson, Laura, 1986, *Creating advantage: an industrial policy perspective,* Berkeley, University of California, Economic Department and Round Table on International Economy, October.

UNDP/ECLAC, Joint UNDP/ECLAC Project on the Implications for Latin America of the International Monetary and Financial System, 1986, *Latin America: International Monetary System and External Financing,* Santiago, Chile.

UNIDO (United Nations Industrial Development Organization), 1987, *The Republic of Korea,* Industrial Development Review Series, Vienna.

———, 1985, *World industry: a statistical review 1985* (UNIDO/IS.590), Vienna.

United Nations, 1982, *Relationship Between Disarmament and Development*, Disarmament Study Series, No. 5, New York. United Nations publication, Sales No. E.82.IX.1.

———, 1985, *National Accounts Statistics: Compendium of Income Distribution Statistics* (ST/ESA/STAT/SER.M/79), New York.

———, 1986a, *Elaboración de índices de precios y paridades de poder adquisitivo para la comparación de gastos militares* (A/CONF.130/PC/INF/4), New York, 1986.

———, 1986b, *Reduction of Military Budgets*, Disarmament Study Series, No. 15, New York. United Nations publication, Sales No. E.86.IX.2.

———, 1986c, *Savings for development: report of the Third International Symposium*, New York.

U.S. Department of Commerce, 1984, *U.S. industrial outlook, 1984*, Washington, D.C., U.S. Government Printing Press.

———, 1986, *U.S. industrial outlook*, Washington, D.C., January.

Varas, Augusto, 1986, "Economic impact of military spending. Military spending in the development process", *Disarmament*, vol. IX, No. 13, New York, United Nations.

Wade, Robert and Gordon White (ed.), 1984, "Development states in East Asia: capitalist and socialist", *Bulletin IDS*, vol. 15, No. 2, April.

Wells, John and Andrés Drobny, 1982, "Distribuçãõ da renda e o salario minimo no Brasil: uma revisão critica da literatura existente", *Pesquisa e Planejamento Económico*, vol. 12, No. 13, December.

World Bank, 1986a, *World Development Report*, 1986, Washington, D.C.

———, 1986b, *Price Prospects for Major Primary Commodities*, Washington, D.C., October.

World Resources Institute and International Institute for Environment and Development, 1986, *World Resources, 1986*, New York, Basic Books.

Yojima, Kiyoshi and Terutomo Ozawa, 1984, "Micro and macro-economic models of direct foreign investment: toward a synthesis", *Hitotsubashi Journal of Economics*, vol. 25, No. 1, June.

Zaidi, Igbal Mendi, 1985, "Saving, investment, fiscal deficits, and the external indebtedness of developing countries", *World Development*, vol. 13, No. 5, May.

Zysman, John, 1983, *Governments, markets and growth. Financial systems and the politics of change*, Ithaca, Cornell University Press.

Zysman, John and Laura Tyson (eds.), 1983, *American industry in international competition, government policies and corporate strategies*, Ithaca, and London, Cornell University Press.

ECLAC
publications

ECONOMIC COMMISSION FOR LATIN AMERICA AND THE CARIBBEAN
Casilla 179-D Santiago, Chile

PERIODIC PUBLICATIONS

C E P A L Review

CEPAL Review first appeared in 1976 as part of the Publications Programme of the Economic Commission for Latin America and the Caribbean, its aim being to make a contribution to the study of the economic and social development problems of the region. The views expressed in signed articles, including those by Secretariat staff members, are those of the authors and therefore do not necessarily reflect the point of view of the Organization.

CEPAL Review is published in Spanish and English versions three times a year.

Annual subscription costs for 1989 are US$16 for the Spanish version and US$18 for the English version. The price of single issues is US$10 in both cases.

Estudio Económico de América Latina y el Caribe		***Economic Survey of Latin America and the Caribbean***	
1980,	664 pp.	*1980,*	629 pp.
1981,	863 pp.	*1981,*	837 pp.
1982, vol. I	693 pp.	*1982, vol. I*	658 pp.
1982, vol. II	199 pp.	*1982, vol. II*	186 pp.
1983, vol. I	694 pp.	*1983, vol. I*	686 pp.
1983, vol. II	179 pp.	*1983, vol. II*	166 pp.
1984, vol. I	702 pp.	*1984, vol. I*	685 pp.
1984, vol. II	233 pp.	*1984, vol. II*	216 pp.
1985,	672 pp.	*1985,*	660 pp.
1986,	734 pp.	*1986,*	729 pp.
1987,	692 pp.	*1987,*	685 pp.
1988,	741 pp.	*1988,*	637 pp.

(Issues for previous years also available)

Anuario Estadístico de América Latina y el Caribe/
Statistical Yearbook for Latin America and the Caribbean (bilingual)

1980, 617 pp.
1981, 727 pp.
1983, (1982/1983) 749 pp.
1984, 761 pp.
1985, 792 pp.
1986, 782 pp.
1987, 714 pp.
1988, 782 pp.
1989, 770 pp.

(Issues for previous years also available)

Libros de la C E P A L

1 *Manual de proyectos de desarrollo económico,* 1958, 5th. ed. 1980, 264 pp.
1 Manual on economic development projects, 1958, 2nd. ed. 1972, 242 pp.
2 *América Latina en el umbral de los años ochenta,* 1979, 2nd. ed. 1980, 203 pp.
3 *Agua, desarrollo y medio ambiente en América Latina,* 1980, 443 pp.
4 *Los bancos transnacionales y el financiamiento externo de América Latina. La experiencia del Perú,* 1980, 265 pp.
4 Transnational banks and the external finance of Latin America: the experience of Peru, 1985, 342 pp.
5 *La dimensión ambiental en los estilos de desarrollo de América Latina,* por Osvaldo Sunkel, 1981, 2nd. ed. 1984, 136 pp.
6 *La mujer y el desarrollo: guía para la planificación de programas y proyectos,* 1984, 115 pp.
6 Women and development: guidelines for programme and project planning, 1982, 3rd. ed. 1984, 123 pp.
7 *Africa y América Latina: perspectivas de la cooperación interregional,* 1983, 286 pp.
8 *Sobrevivencia campesina en ecosistemas de altura,* vols. I y II, 1983, 720 pp.
9 *La mujer en el sector popular urbano. América Latina y el Caribe,* 1984, 349 pp.
10 *Avances en la interpretación ambiental del desarrollo agrícola de América Latina,* 1985, 236 pp.
11 *El decenio de la mujer en el escenario latinoamericano,* 1986, 216 pp.
11 The decade for women in Latin America and the Caribbean: background and prospects, 1988, 215 pp.
12 *América Latina: sistema monetario internacional y financiamiento externo,* 1986, 416 pp.
12 Latin America: international monetary system and external financing, 1986, 405 pp.
13 *Raúl Prebisch: Un aporte al estudio de su pensamiento,* 1987, 146 pp.
14 *Cooperativismo latinoamericano: antecedentes y perspectivas,* 1989, 371 pp.
15 *CEPAL, 40 años (1948-1988),* 1988, 85 pp.
15 ECLAC 40 Years (1948-1988), 1989, 83 pp.
16 *América Latina en la economía mundial,* 1988, 321 pp.
17 *Gestión para el desarrollo de cuencas de alta montaña en la zona andina,* 1988, 187 pp.
18 *Políticas macroeconómicas y brecha externa: América Latina en los años ochenta,* 1989, 201 pp.
19 *CEPAL, Bibliografía 1948-1988,* 1989, 648 pp.
20 *Desarrollo agrícola y participación campesina,* 1989, 404 pp.
21 *Planificación y gestión del desarrollo en áreas de expansión de la frontera agropecuaria en América Latina,* 1989, 113 pp.
22 *Transformación ocupacional y crisis social en América Latina,* 1989, 243 pp.
23 *La crisis urbana en América Latina y el Caribe: reflexiones sobre alternativas de solución,* 1990, 197 pp.
25 *Transformación productiva con equidad,* 1990, 185 pp.
25 Changing production with social equity, 1990, 177 pp.
26 *América Latina y el Caribe: opciones para reducir el peso de la deuda,* 1990, 118 pp.
26 Latin America and the Caribbean: options to reduce the debt burden, 1990, 110 pp.

MONOGRAPH SERIES

Cuadernos de la C E P A L

1 *América Latina: el nuevo escenario regional y mundial/**Latin America: the new regional and world setting,*** (bilingual), 1975, 2nd. ed. 1985, 103 pp.
2 *Las evoluciones regionales de la estrategia internacional del desarrollo,* 1975, 2nd. ed. 1984, 73 pp.
2 ***Regional appraisals of the international development strategy,*** 1975, 2nd. ed. 1985, 82 pp.
3 *Desarrollo humano, cambio social y crecimiento en América Latina,* 1975, 2nd. ed. 1984, 103 pp.
4 *Relaciones comerciales, crisis monetaria e integración económica en América Latina,* 1975, 85 pp.
5 *Síntesis de la segunda evaluación regional de la estrategia internacional del desarrollo,* 1975, 72 pp.
6 *Dinero de valor constante. Concepto, problemas y experiencias,* por Jorge Rose, 1975, 2nd. ed. 1984, 43 pp.
7 *La coyuntura internacional y el sector externo,* 1975, 2nd. ed. 1983, 106 pp.
8 *La industrialización latinoamericana en los años setenta,* 1975, 2nd. ed. 1984, 116 pp.
9 *Dos estudios sobre inflación 1972-1974. La inflación en los países centrales. América Latina y la inflación importada,* 1975, 2nd. ed. 1984, 57 pp.
s/n ***Canada and the foreign firm,*** D. Pollock, 1976, 43 pp.
10 *Reactivación del mercado común centroamericano,* 1976, 2nd. ed. 1984, 149 pp.
11 *Integración y cooperación entre países en desarrollo en el ámbito agrícola,* por Germánico Salgado, 1976, 2nd. ed. 1985, 62 pp.
12 *Temas del nuevo orden económico internacional,* 1976, 2nd. ed. 1984, 85 pp.
13 *En torno a las ideas de la CEPAL: desarrollo, industrialización y comercio exterior,* 1977, 2nd. ed. 1985, 57 pp.
14 *En torno a las ideas de la CEPAL: problemas de la industrialización en América Latina,* 1977, 2nd. ed. 1984, 46 pp.
15 *Los recursos hidráulicos de América Latina. Informe regional,* 1977, 2nd. ed. 1984, 75 pp.
15 ***The water resources of Latin America. Regional report,*** 1977, 2nd. ed. 1985, 79 pp.
16 *Desarrollo y cambio social en América Latina,* 1977, 2nd. ed. 1984, 59 pp.
17 *Estrategia internacional de desarrollo y establecimiento de un nuevo orden económico internacional,* 1977, 3rd. ed. 1984, 61 pp.
17 ***International development strategy and establishment of a new international economic order,*** 1977, 3rd. ed. 1985, 59 pp.
18 *Raíces históricas de las estructuras distributivas de América Latina,* por A. di Filippo, 1977, 2nd. ed. 1983, 64 pp.
19 *Dos estudios sobre endeudamiento externo,* por C. Massad y R. Zahler, 1977, 2nd. ed. 1986, 66 pp.
s/n ***United States — Latin American trade and financial relations: some policy recommendations,*** S. Weintraub, 1977, 44 pp.
20 *Tendencias y proyecciones a largo plazo del desarrollo económico de América Latina,* 1978, 3rd. ed. 1985, 134 pp.
21 *25 años en la agricultura de América Latina: rasgos principales 1950-1975,* 1978, 2nd. ed. 1983, 124 pp.
22 *Notas sobre la familia como unidad socioeconómica,* por Carlos A. Borsotti, 1978, 2nd. ed. 1984, 60 pp.
23 *La organización de la información para la evaluación del desarrollo,* por Juan Sourrouille, 1978, 2nd. ed. 1984, 61 pp.
24 *Contabilidad nacional a precios constantes en América Latina,* 1978, 2nd. ed. 1983, 60 pp.
s/n ***Energy in Latin America: The Historical Record,*** J. Mullen, 1978, 66 pp.

25 *Ecuador: desafíos y logros de la política económica en la fase de expansión petrolera,* 1979, 2nd. ed. 1984, 153 pp.
26 *Las transformaciones rurales en América Latina: ¿desarrollo social o marginación?,* 1979, 2nd. ed. 1984, 160 pp.
27 *La dimensión de la pobreza en América Latina,* por Oscar Altimir, 1979, 2nd. ed. 1983, 89 pp.
28 *Organización institucional para el control y manejo de la deuda externa. El caso chileno,* por Rodolfo Hoffman, 1979, 35 pp.
29 *La política monetaria y el ajuste de la balanza de pagos: tres estudios,* 1979, 2nd. ed. 1984, 61 pp.
29 ***Monetary policy and balance of payments adjustment: three studies,*** 1979, 60 pp.
30 *América Latina: las evaluaciones regionales de la estrategia internacional del desarrollo en los años setenta,* 1979, 2nd. ed. 1982, 237 pp.
31 *Educación, imágenes y estilos de desarrollo,* por G. Rama, 1979, 2nd. ed. 1982, 72 pp.
32 *Movimientos internacionales de capitales,* por R. H. Arriazu, 1979, 2nd. ed. 1984, 90 pp.
33 *Informe sobre las inversiones directas extranjeras en América Latina,* por A. E. Calcagno, 1980, 2nd. ed. 1982, 114 pp.
34 *Las fluctuaciones de la industria manufacturera argentina, 1950-1978,* por D. Heymann, 1980, 2nd. ed. 1984, 234 pp.
35 *Perspectivas de reajuste industrial: la Comunidad Económica Europea y los países en desarrollo,* por B. Evers, G. de Groot y W. Wagenmans, 1980, 2nd. ed. 1984, 69 pp.
36 *Un análisis sobre la posibilidad de evaluar la solvencia crediticia de los países en desarrollo,* por A. Saieh, 1980, 2nd. ed. 1984, 82 pp.
37 *Hacia los censos latinoamericanos de los años ochenta,* 1981, 146 pp.
s/n ***The economic relations of Latin America with Europe,*** 1980, 2nd. ed. 1983, 156 pp.
38 *Desarrollo regional argentino: la agricultura,* por J. Martin, 1981, 2nd. ed. 1984, 111 pp.
39 *Estratificación y movilidad ocupacional en América Latina,* por C. Filgueira y C. Geneletti, 1981, 2nd. ed. 1985, 162 pp.
40 *Programa de acción regional para América Latina en los años ochenta,* 1981, 2nd. ed. 1984, 62 pp.
40 ***Regional programme of action for Latin America in the 1980s,*** 1981, 2nd. ed. 1984, 57 pp.
41 *El desarrollo de América Latina y sus repercusiones en la educación. Alfabetismo y escolaridad básica,* 1982, 246 pp.
42 *América Latina y la economía mundial del café,* 1982, 95 pp.
43 *El ciclo ganadero y la economía argentina,* 1983, 160 pp.
44 *Las encuestas de hogares en América Latina,* 1983, 122 pp.
45 *Las cuentas nacionales en América Latina y el Caribe,* 1983, 100 pp.
45 ***National accounts in Latin America and the Caribbean,*** 1983, 97 pp.
46 *Demanda de equipos para generación, transmisión y transformación eléctrica en América Latina,* 1983, 193 pp.
47 *La economía de América Latina en 1982: evolución general, política cambiaria y renegociación de la deuda externa,* 1984, 104 pp.
48 *Políticas de ajuste y renegociación de la deuda externa en América Latina,* 1984, 102 pp.
49 *La economía de América Latina y el Caribe en 1983: evolución general, crisis y procesos de ajuste,* 1985, 95 pp.
49 ***The economy of Latin America and the Caribbean in 1983: main trends, the impact of the crisis and the adjustment processes,*** 1985, 93 pp.
50 *La CEPAL, encarnación de una esperanza de América Latina,* por Hernán Santa Cruz, 1985, 77 pp.
51 *Hacia nuevas modalidades de cooperación económica entre América Latina y el Japón,* 1986, 233 pp.
51 ***Towards new forms of economic co-operation between Latin America and Japan,*** 1987, 245 pp.

52 *Los conceptos básicos del transporte marítimo y la situación de la actividad en América Latina,* 1986, 112 pp.

52 Basic concepts of maritime transport and its present status in Latin America and the Caribbean, 1987, 114 pp.

53 *Encuestas de ingresos y gastos. Conceptos y métodos en la experiencia latinoamericana.* 1986, 128 pp.

54 *Crisis económica y políticas de ajuste, estabilización y crecimiento,* 1986, 123 pp.

54 The economic crisis: Policies for adjustment, stabilization and growth, 1986, 125 pp.

55 *El desarrollo de América Latina y el Caribe: escollos, requisitos y opciones,* 1987, 184 pp.

55 Latin American and Caribbean development: obstacles, requirements and options, 1987, 184 pp.

56 *Los bancos transnacionales y el endeudamiento externo en la Argentina,* 1987, 112 pp.

57 *El proceso de desarrollo de la pequeña y mediana empresa y su papel en el sistema industrial: el caso de Italia,* 1988, 112 pp.

58 *La evolución de la economía de América Latina en 1986,* 1987, 99 pp.

58 The evolution of the Latin American Economy in 1986, 1988, 95 pp.

59 Protectionism: regional negotiation and defence strategies, 1988, 261 pp.

60 *Industrialización en América Latina: de la "caja negra" al "casillero vacío",* 1989, 176 pp.

61 *Hacia un desarrollo sostenido en América Latina y el Caribe: restricciones y requisitos,* 1989, 94 pp.

61 Towards sustained development in Latin America and the Caribbean: restrictions and requisites, 1989, 93 pp.

62 *La evolución de la economía de América Latina en 1987,* 1989, 87 pp.

62 The evolution of the Latin American economy in 1987, 1989, 84 pp.

63 *Elementos para el diseño de políticas industriales y tecnológicas en América Latina,* 1990, 172 pp.

64 *La industria de transporte regular internacional y la competitividad del comercio exterior de los países de América Latina y el Caribe,* 1989, 132 pp.

64 The international common-carrier transportation industry and the competitiveness of the foreign trade of the countries of Latin America and the Caribbean, 1989, 116 pp.

Cuadernos Estadísticos de la C E P A L

1 *América Latina: relación de precios del intercambio,* 1976, 2nd. ed., 1984, 66 pp.

2 *Indicadores del desarrollo económico y social en América Latina,* 1976, 2nd. ed. 1984, 179 pp.

3 *Series históricas del crecimiento de América Latina,* 1978, 2nd. ed. 1984, 206 pp.

4 *Estadísticas sobre la estructura del gasto de consumo de los hogares según finalidad del gasto, por grupos de ingreso,* 1978, 110 pp. (Out of print; replaced by No. 8 below)

5 *El balance de pagos de América Latina, 1950-1977,* 1979, 2nd. ed. 1984, 164 pp.

6 *Distribución regional del producto interno bruto sectorial en los países de América Latina,* 1981, 2nd. ed. 1985, 68 pp.

7 *Tablas de insumo-producto en América Latina,* 1983, 383 pp.

8 *Estructura del gasto de consumo de los hogares según finalidad del gasto, por grupos de ingreso,* 1984, 146 pp.

9 *Origen y destino del comercio exterior de los países de la Asociación Latinoamericana de Integración y del Mercado Común Centromericano,* 1985, 546 pp.

10 *América Latina: balance de pagos, 1950-1984,* 1986, 357 pp.

11 *El comercio exterior de bienes de capital en América Latina,* 1986, 288 pp.

12 *América Latina: Indices de comercio exterior, 1970-1984,* 1987, 355 pp.

13 *América Latina: comercio exterior según la clasificación industrial internacional uniforme de todas las actividades económicas,* 1987, Vol. I, 675 pp; Vol. II, 675 pp.

14 *La distribución del ingreso en Colombia. Antecedentes estadísticos y características socioeconómicas de los receptores,* 1988, 156 pp.

Estudios e Informes de la C E P A L

1 *Nicaragua: el impacto de la mutación política,* 1981, 2nd. ed. 1982, 126 pp.
2 *Perú 1968-1977: la política económica en un proceso de cambio global,* 1981, 2nd. ed. 1982, 166 pp.
3 *La industrialización de América Latina y la cooperación internacional,* 1981, 170 pp. (Out of print; will not be reprinted.)
4 *Estilos de desarrollo, modernización y medio ambiente en la agricultura latinoamericana,* 1981, 4th. ed. 1984, 130 pp.
5 *El desarrollo de América Latina en los años ochenta,* 1981, 2nd. ed. 1982, 153 pp.
5 ***Latin American development in the 1980s,*** 1981, 2nd. ed. 1982, 134 pp.
6 *Proyecciones del desarrollo latinoamericano en los años ochenta,* 1981, 3rd. ed. 1985, 96 pp.
6 ***Latin American development projections for the 1980s,*** 1982, 2nd. ed. 1983, 89 pp.
7 *Las relaciones económicas externas de América Latina en los años ochenta,* 1981, 2nd. ed. 1982, 180 pp.
8 *Integración y cooperación regionales en los años ochenta,* 1982, 2nd. ed. 1982, 174 pp.
9 *Estrategias de desarrollo sectorial para los años ochenta: industria y agricultura,* 1981, 2nd. ed. 1985, 100 pp.
10 *Dinámica del subempleo en América Latina. PREALC,* 1981, 2nd. ed. 1985, 101 pp.
11 *Estilos de desarrollo de la industria manufacturera y medio ambiente en América Latina,* 1982, 2nd. ed. 1984, 178 pp.
12 *Relaciones económicas de América Latina con los países miembros del "Consejo de Asistencia Mutua Económica",* 1982, 154 pp.
13 *Campesinado y desarrollo agrícola en Bolivia,* 1982, 175 pp.
14 *El sector externo: indicadores y análisis de sus fluctuaciones. El caso argentino,* 1982, 2nd. ed. 1985, 216 pp.
15 *Ingeniería y consultoría en Brasil y el Grupo Andino,* 1982, 320 pp.
16 *Cinco estudios sobre la situación de la mujer en América Latina,* 1982, 2nd. ed. 1985, 178 pp.
16 ***Five studies on the situation of women in Latin America,*** 1983, 2nd. ed. 1984, 188 pp.
17 *Cuentas nacionales y producto material en América Latina,* 1982, 129 pp.
18 *El financiamiento de las exportaciones en América Latina,* 1983, 212 pp.
19 *Medición del empleo y de los ingresos rurales,* 1982, 2nd. ed. 1983, 173 pp.
19 ***Measurement of employment and income in rural areas,*** 1983, 184 pp.
20 *Efectos macroeconómicos de cambios en las barreras al comercio y al movimiento de capitales: un modelo de simulación,* 1982, 68 pp.
21 *La empresa pública en la economía: la experiencia argentina,* 1982, 2nd. ed. 1985, 134 pp.
22 *Las empresas transnacionales en la economía de Chile, 1974-1980,* 1983, 178 pp.
23 *La gestión y la informática en las empresas ferroviarias de América Latina y España,* 1983, 195 pp.
24 *Establecimiento de empresas de reparación y mantenimiento de contenedores en América Latina y el Caribe,* 1983, 314 pp.
24 ***Establishing container repair and maintenance enterprises in Latin America and the Caribbean,*** 1983, 236 pp.
25 *Agua potable y saneamiento ambiental en América Latina, 1981-1990/****Drinking water supply and sanitation in Latin America, 1981-1990*** (bilingual), 1983, 140 pp.
26 *Los bancos transnacionales, el estado y el endeudamiento externo en Bolivia,* 1983, 282 pp.
27 *Política económica y procesos de desarrollo. La experiencia argentina entre 1976 y 1981,* 1983, 157 pp.
28 *Estilos de desarrollo, energía y medio ambiente: un estudio de caso exploratorio,* 1983, 129 pp.
29 *Empresas transnacionales en la industria de alimentos. El caso argentino: cereales y carne,* 1983, 93 pp.
30 *Industrialización en Centroamérica, 1960-1980,* 1983, 168 pp.
31 *Dos estudios sobre empresas transnacionales en Brasil,* 1983, 141 pp.

32 *La crisis económica internacional y su repercusión en América Latina,* 1983, 81 pp.
33 *La agricultura campesina en sus relaciones con la industria,* 1984, 120 pp.
34 *Cooperación económica entre Brasil y el Grupo Andino: el caso de los minerales y metales no ferrosos,* 1983, 148 pp.
35 *La agricultura campesina y el mercado de alimentos: la dependencia externa y sus efectos en una economía abierta,* 1984, 201 pp.
36 *El capital extranjero en la economía peruana,* 1984, 178 pp.
37 *Dos estudios sobre política arancelaria,* 1984, 96 pp.
38 *Estabilización y liberalización económica en el Cono Sur,* 1984, 193 pp.
39 *La agricultura campesina y el mercado de alimentos: el caso de Haití y el de la República Dominicana,* 1984, 255 pp.
40 *La industria siderúrgica latinoamericana: tendencias y potencial,* 1984, 280 pp.
41 *La presencia de las empresas transnacionales en la economía ecuatoriana,* 1984, 77 pp.
42 *Precios, salarios y empleo en la Argentina: estadísticas económicas de corto plazo,* 1984, 378 pp.
43 *El desarrollo de la seguridad social en América Latina,* 1985, 348 pp.
44 ***Market structure, firm size and Brazilian exports,*** 1985, 104 pp.
45 *La planificación del transporte en países de América Latina,* 1985, 247 pp.
46 *La crisis en América Latina: su evaluación y perspectivas,* 1985, 119 pp.
47 *La juventud en América Latina y el Caribe,* 1985, 181 pp.
48 *Desarrollo de los recursos mineros de América Latina,* 1985, 145 pp.
48 ***Development of the mining resources of Latin America,*** 1989, 160 pp.
49 *Las relaciones económicas internacionales de América Latina y la cooperación regional,* 1985, 224 pp.
50 *América Latina y la economía mundial del algodón,* 1985, 122 pp.
51 *Comercio y cooperación entre países de América Latina y países miembros del CAME,* 1985, 90 pp.
52 ***Trade relations between Brazil and the United States,*** 1985, 148 pp.
53 *Los recursos hídricos de América Latina y el Caribe y su aprovechamiento,* 1985, 138 pp.
53 ***The water resources of Latin America and the Caribbean and their utilization,*** 1985, 135 pp.
54 *La pobreza en América Latina: dimensiones y políticas,* 1985, 155 pp.
55 *Políticas de promoción de exportaciones en algunos países de América Latina,* 1985, 207 pp.
56 *Las empresas transnacionales en la Argentina,* 1986, 222 pp.
57 *El desarrollo frutícola y forestal en Chile y sus derivaciones sociales,* 1986, 227 pp.
58 *El cultivo del algodón y la soya en el Paraguay y sus derivaciones sociales,* 1986, 141 pp.
59 *Expansión del cultivo de la caña de azúcar y de la ganadería en el nordeste del Brasil: un examen del papel de la política pública y de sus derivaciones económicas y sociales,* 1986, 164 pp.
60 *Las empresas transnacionales en el desarrollo colombiano,* 1986, 212 pp.
61 *Las empresas transnacionales en la economía del Paraguay,* 1987, 115 pp.
62 *Problemas de la industria latinoamericana en la fase crítica,* 1986, 113 pp.
63 *Relaciones económicas internacionales y cooperación regional de América Latina y el Caribe,* 1987, 272 pp.
63 ***International economic relations and regional co-operation in Latin America and the Caribbean,*** 1987, 267 pp.
64 *Tres ensayos sobre inflación y políticas de estabilización,* 1986, 201 pp.
65 *La industria farmacéutica y farmoquímica: desarrollo histórico y posibilidades futuras. Argentina, Brasil y México,* 1987, 177 pp.
66 *Dos estudios sobre América Latina y el Caribe y la economía internacional,* 1987, 125 pp.
67 *Reestructuración de la industria automotriz mundial y perspectivas para América Latina,* 1987, 232 pp.
68 *Cooperación latinoamericana en servicios: antecedentes y perspectivas,* 1988, 155 pp.
69 *Desarrollo y transformación: estrategia para superar la pobreza,* 1988, 114 pp.
69 ***Development and change: strategies for vanquishing poverty,*** 1988, 114 pp.

70 *La evolución económica del Japón y su impacto en América Latina,* 1988, 88 pp.
71 *La gestión de los recursos hídricos en América Latina y el Caribe,* 1989, 256 pp.
72 *La evolución del problema de la deuda externa en América Latina y el Caribe,* 1988, 77 pp.
72 The evolution of the external debt problem in Latin America and the Caribbean, 1988, 69 pp.
73 *Agricultura, comercio exterior y cooperación internacional,* 1988, 83 pp.
73 Agriculture, external trade and international co-operation, 1989, 79 pp.
74 *Reestructuración industrial y cambio tecnológico: consecuencias para América Latina,* 1989, 105 pp.
75 *El medio ambiente como factor de desarrollo,* 1989, 123 pp.
76 *El comportamiento de los bancos transnacionales y la crisis internacional de endeudamiento,* 1989, 214 pp.
76 Transnational bank behaviour and the international debt crisis, 1989, 198 pp.

Serie INFOPLAN: Temas Especiales del Desarrollo

1 *Resúmenes de documentos sobre deuda externa,* 1986, 324 pp.
2 *Resúmenes de documentos sobre cooperación entre países en desarrollo,* 1986, 189 pp.
3 *Resúmenes de documentos sobre recursos hídricos,* 1987, 290 pp.
4 *Resúmenes de documentos sobre planificación y medio ambiente,* 1987, 111 pp.
5 *Resúmenes de documentos sobre integración económica en América Latina y el Caribe,* 1987, 273 pp.
6 *Resúmenes de documentos sobre cooperación entre países en desarrollo, II parte,* 1988, 146 pp.

كيفية الحصول على منشورات الامم المتحدة

يمكن الحصول على منشورات الامم المتحدة من المكتبات ودور التوزيع في جميع انحاء العالم ، استعلم عنها من المكتبة التي تتعامل معها أو اكتب الى : الامم المتحدة ،قسم البيع في نيويورك او في جنيف ،

如何购取联合国出版物

联合国出版物在全世界各地的书店和经售处均有发售。请向书店询问或写信到纽约或日内瓦的联合国销售组。

HOW TO OBTAIN UNITED NATIONS PUBLICATIONS

United Nations publications may be obtained from bookstores and distributors throughout the world. Consult your bookstore or write to: United Nations, Sales Section, New York or Geneva.

COMMENT SE PROCURER LES PUBLICATIONS DES NATIONS UNIES

Les publications des Nations Unies sont en vente dans les librairies et les agences dépositaires du monde entier. Informez-vous auprès de votre libraire ou adressez-vous à : Nations Unies, Section des ventes, New York ou Genève.

КАК ПОЛУЧИТЬ ИЗДАНИЯ ОРГАНИЗАЦИИ ОБЪЕДИНЕННЫХ НАЦИЙ

Издания Организации Объединенных Наций можно купить в книжных магазинах и агентствах во всех районах мира. Наводите справки об изданиях в вашем книжном магазине или пишите по адресу: Организация Объединенных Наций, Секция по продаже изданий, Нью-Йорк или Женева.

COMO CONSEGUIR PUBLICACIONES DE LAS NACIONES UNIDAS

Las publicaciones de las Naciones Unidas están en venta en librerías y casas distribuidoras en todas partes del mundo. Consulte a su librero o diríjase a: Naciones Unidas, Sección de Ventas, Nueva York o Ginebra.

Publications of the Economic Commission for Latin America and the Caribbean (ECLAC) and those of the Latin American and the Caribbean Institute for Economic and Social Planning (ILPES) can be ordered from your local distributor or directly through:

United Nations Publications
Sales Section, — DC-2-866
New York, NY, 10017
USA

United Nations Publications
Sales Section
Palais des Nations
1211 Geneve 10, Switzerland

Distribution Unit
CEPAL — Casilla 179-D
Santiago, Chile

First edition

Printed in United Nations — Santiago, Chile — 89-8-1129 — August 1990 — 1 380

ISSN 0252-2195 — ISBN 92-1-121157-3 — E.89.II.G.5 — 00600 P